Pioneer sound.vision.soul

Service Manual

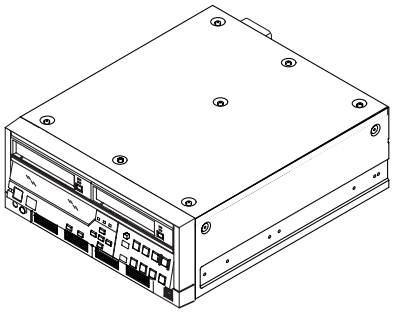

PRV-LX10

ORDER NO.
RRV3069

DVD RECORDER

PRV-LX10

THIS MANUAL IS APPLICABLE TO THE FOLLOWING MODEL(S) AND TYPE(S).

Model	Type	Power Requirement	Remarks
PRV-LX10	WYV/RB	AC220- 240V	

• Before returning the repaired product to the user, be sure to upgrade the firmware to its latest version.

For details, refer to "Important Check Points for good Servicing".

PIONEER CORPORATION 4-1, Meguro 1-chome, Meguro-ku, Tokyo 153-8654, Japan
PIONEER ELECTRONICS (USA) INC. P.O. Box 1760, Long Beach, CA 90801-1760, U.S.A.
PIONEER EUROPE NV Haven 1087, Keetberglaan 1, 9120 Melsele, Belgium
PIONEER ELECTRONICS ASIACENTRE PTE. LTD. 253 Alexandra Road, #04-01, Singapore 159936
ⓒ**PIONEER CORPORATION 2005**

T-ZZY JAN. 2005 printed in Japan

SAFETY INFORMATION

This service manual is intended for qualified service technicians ; it is not meant for the casual do-it-yourselfer. Qualified technicians have the necessary test equipment and tools, and have been trained to properly and safely repair complex products such as those covered by this manual.
Improperly performed repairs can adversely affect the safety and reliability of the product and may void the warranty. If you are not qualified to perform the repair of this product properly and safely, you should not risk trying to do so and refer the repair to a qualified service technician.

WARNING
This product contains lead in solder and certain electrical parts contain chemicals which are known to the state of California to cause cancer, birth defects or other reproductive harm.

Health & Safety Code Section 25249.6 – Proposition 65

NOTICE
(FOR CANADIAN MODEL ONLY)
Fuse symbols (fast operating fuse) and/or (slow operating fuse) on PCB indicate that replacement parts must be of identical designation.

REMARQUE
(POUR MODÈLE CANADIEN SEULEMENT)
Les symboles de fusible (fusible de type rapide) et/ou (fusible de type lent) sur CCI indiquent que les pièces de remplacement doivent avoir la même désignation.

(FOR USA MODEL ONLY)

1. SAFETY PRECAUTIONS

The following check should be performed for the continued protection of the customer and service technician.

LEAKAGE CURRENT CHECK

Measure leakage current to a known earth ground (water pipe, conduit, etc.) by connecting a leakage current tester such as Simpson Model 229-2 or equivalent between the earth ground and all exposed metal parts of the appliance (input/output terminals, screwheads, metal overlays, control shaft, etc.). Plug the AC line cord of the appliance directly into a 120V AC 60Hz outlet and turn the AC power switch on. Any current measured must not exceed 0.5mA.

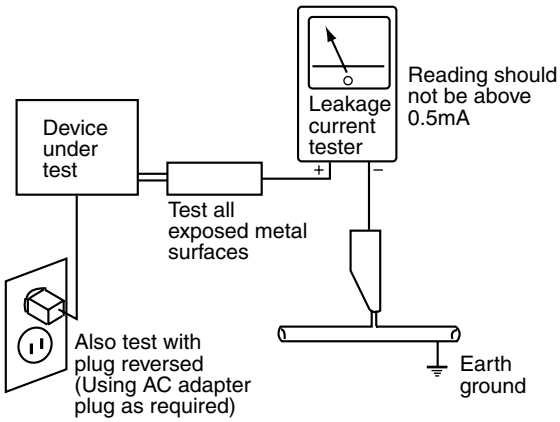

AC Leakage Test

ANY MEASUREMENTS NOT WITHIN THE LIMITS OUTLINED ABOVE ARE INDICATIVE OF A POTENTIAL SHOCK HAZARD AND MUST BE CORRECTED BEFORE RETURNING THE APPLIANCE TO THE CUSTOMER.

2. PRODUCT SAFETY NOTICE

Many electrical and mechanical parts in the appliance have special safety related characteristics. These are often not evident from visual inspection nor the protection afforded by them necessarily can be obtained by using replacement components rated for voltage, wattage, etc. Replacement parts which have these special safety characteristics are identified in this Service Manual.

Electrical components having such features are identified by marking with a ⚠ on the schematics and on the parts list in this Service Manual.
The use of a substitute replacement component which does not have the same safety characteristics as the PIONEER recommended replacement one, shown in the parts list in this Service Manual, may create shock, fire, or other hazards.

Product Safety is continuously under review and new instructions are issued from time to time. For the latest information, always consult the current PIONEER Service Manual. A subscription to, or additional copies of, PIONEER Service Manual may be obtained at a nominal charge from PIONEER.

IMPORTANT

THIS PIONEER APPARATUS CONTAINS INVISIBLE LASER OF CLASS 3b and VISIBLE LASER OF CLASS 2.
SERVICING OPERATION OF THE APPARATUS SHOULD BE DONE BY A SPECIALLY INSTRUCTED PERSON.

LASER DIODE CHARACTERISTICS
MAXIMUM OUTPUT POWER: 25 mW
WAVELENGTH: 654 - 662 nm

LASER DIODE CHARACTERISTICS
MAXIMUM OUTPUT POWER: 36 mW
WAVELENGTH: 780 - 787 nm

LABEL CHECK

DRIVE Assy LX1

DANGER
VISIBLE AND INVISIBLE LASER RADIATION WHEN OPEN. AVOID DIRECT EXPOSURE TO BEAM.
DANGER
PRÉSENCE DE RAYONNEMENT LASER VISIBLE ET INVISIBLE APRÈS OUVERTURE. ÉVITEZ TOUTE EXPOSITION DIRECTE AU RAYON LASER.
DRW2069

(DRW2069)

Note: You will see one of the following two labels attached.

DANGER	VISIBLE AND INVISIBLE LASER RADIATION WHEN OPEN. AVOID DIRECT EXPOSURE TO BEAM.
DANGER	PRÉSENCE DE RAYONNEMENT LASER VISIBLE ET INVISIBLE APRÈS OUVERTURE. ÉVITEZ TOUTE EXPOSITION DIRECTE AU RAYON LASER.
FARE	SYNLIG OG USYNLIG LASERSTRÅLING, HVIS ÅBEN. UNDGÅ DIREKTE EKSPONERING FOR STRÅLEN.
VAROITUS	NÄKYVÄ JA NÄKYMÄTÖN LASERSÄTEILY KUN AVA-TTAESSA. VÄLTÄ SUORAA KOSKETUSTA SÄTEEN.
FARA!	SYNLIG OCH OSYNLIG LASERSTRÅLNING NÄR APPARATEN ÄR ÖPPEN. UNDVIK ATT UTSÄTTA DIG FÖR DIREKT STRÅLNING.
GEFAHR	SICHTBARE UND UNSICHTBARE LASERSTRAHLUNG WENN OFFEN. SETZEN SIE SICH NICHT DEM LASERSTRAHL AUS.

DRW2106-A

CLASS 1 LASER PRODUCT
LASER KLASSE 1

THIS DEVICE COMPLIES WITH PART 15 OF THE FCC RULES. OPERATION IS SUBJECT TO THE FOLLOWING TWO CONDITIONS : (1) THIS DEVICE MAY NOT CAUSE HARMFUL INTERFERENCE, AND (2) THIS DEVICE MUST ACCEPT ANY INTERFERENCE RECEIVED, INCLUDING INTERFERENCE THAT MAY CAUSE UNDESIRED OPERATION.

THIS CLASS B DIGITAL APPARATUS COMPLIES WITH CANADIAN ICES-003.
CET APPAREIL NUMÉRIQUE DE LA CLASSE B EST CONFORME À LA NORME NMB-003 DU CANADA.

CERTIFICATION-THIS PRODUCT COMPLIES WITH DHHS RULES 21 CFR, SUBCHAPTER J, PART 1040 AT DATE OF MANUFACTURE.

(DRW2109)

CAUTION	CLASS 3B VISIBLE AND INVISIBLE LASER RADIATION WHEN OPEN. AVOID EXPOSURE TO THE BEAM.
ATTENTION	RADIATIONS LASER VISIBLES ET INVISIBLES DE CLASSE 3B QUAND OUVERT. ÉVITEZ TOUT EXPOSITION AU FAISCEAU.
ADVARSEL	KLASSE 3B SYNLIG OG USYNLIG LASERSTRÅLING VED ÅBNING. UNDGÅ UDSÆTTELSE FOR STRÅLING.
VARO!	AVATTAESSA OLET ALTTIINA NÄKYVÄLLE JA NÄKYMÄTTÖMÄLLE LUOKAN 3B LASERSÄTEILYLLE. ÄLÄ KATSO SÄTEESEEN.
VARNING	KLASS 3B SYNLIG OCH OSYNLIG LASERSTRÅLNING NÄR DENNA DEL ÄR ÖPPNAD. UNDVIK ATT UTSÄTTA DIG FÖR STRÅLEN.
VORSICHT	BEI GEÖFFNETER ABDECKUNG IST SICHTBARE UND UNSICHTBARE LASERSTRAHLUNG DER KLASSE 3B IM GERÄTEINNEREN VORHANDEN. AUGEN NICHT DEM LASERSTRAHL AUSSETZEN!

DRW2185-A

THIS DEVICE COMPLIES WITH PART 15 OF THE FCC RULES. OPERATION IS SUBJECT TO THE FOLLOWING TWO CONDITIONS : (1) THIS DEVICE MAY NOT CAUSE HARMFUL INTERFERENCE, AND (2) THIS DEVICE MUST ACCEPT ANY INTERFERENCE RECEIVED, INCLUDING INTERFERENCE THAT MAY CAUSE UNDESIRED OPERATION.

THIS CLASS B DIGITAL APPARATUS COMPLIES WITH CANADIAN ICES-003.
CET APPAREIL NUMÉRIQUE DE LA CLASSE B EST CONFORME À LA NORME NMB-003 DU CANADA.

CERTIFICATION-THIS PRODUCT COMPLIES WITH 21 CFR 1040.10 AND 1040.11 EXCEPT FOR DEVIATIONS PURSUANT TO LASER NOTICE NO. 50, DATED JULY 26, 2001.

CLASS 1 LASER PRODUCT
LASER KLASSE 1

(DRW2185)

CAUTION:
RISK OF EXPLOSION IF BATTERY IS REPLACED BY AN INCORRECT TYPE.
DISPOSE OF USED BATTERIES ACCORDING TO THE INSTRUCTIONS.
DRW2162-A

(DRW2162)

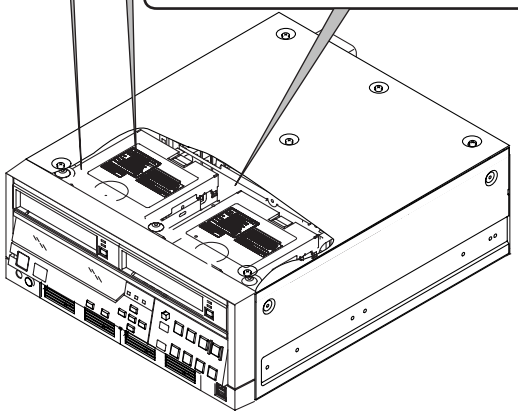

LITHIUM BATTERY NOTICE

CAUTION
Danger of explosion if battery is incorrectly replaced. Replace only with the same or equivalent type recommended by the manufacturer. Discard used batteries according to the manufacturer's instructions.

When replacing the lithium batteries, follow the note below. Dispose of the used battery promptly. Keep away from children. Do not disassemble and do not dispose of in fire.
The battery used in this device may present a fire or chemical hazard if mistreated. Do not recharge, disassemble, heat above 100°C or incinerate. Replace only with the same Part Number. Use of another battery may present a risk of fire or explosion.

Note : The lithium battery installation position is shown in the exploded views.

[Important Check Points for Good Servicing]

In this manual, procedures that must be performed during repairs are marked with the below symbol.
Please be sure to confirm and follow these procedures.

1. Product safety

Please conform to product regulations (such as safety and radiation regulations), and maintain a safe servicing environment by following the safety instructions described in this manual.

① Use specified parts for repair.

Use genuine parts. Be sure to use important parts for safety.

② Do not perform modifications without proper instructions.

Please follow the specified safety methods when modification(addition/change of parts) is required due to interferences such as radio/TV interference and foreign noise.

③ Make sure the soldering of repaired locations is properly performed.

When you solder while repairing, please be sure that there are no cold solder and other debris.
Soldering should be finished with the proper quantity. (Refer to the example)

④ Make sure the screws are tightly fastened.

Please be sure that all screws are fastened, and that there are no loose screws.

⑤ Make sure each connectors are correctly inserted.

Please be sure that all connectors are inserted, and that there are no imperfect insertion.

⑥ Make sure the wiring cables are set to their original state.

Please replace the wiring and cables to the original state after repairs.
In addition, be sure that there are no pinched wires, etc.

⑦ Make sure screws and soldering scraps do not remain inside the product.

Please check that neither solder debris nor screws remain inside the product.

⑧ There should be no semi-broken wires, scratches, melting, etc. on the coating of the power cord.

Damaged power cords may lead to fire accidents, so please be sure that there are no damages.
If you find a damaged power cord, please exchange it with a suitable one.

⑨ There should be no spark traces or similar marks on the power plug.

When spark traces or similar marks are found on the power supply plug, please check the connection and advise on secure connections and suitable usage. Please exchange the power cord if necessary.

⑩ Safe environment should be secured during servicing.

When you perform repairs, please pay attention to static electricity, furniture, household articles, etc. in order to prevent injuries.
Please pay attention to your surroundings and repair safely.

2. Adjustments

To keep the original performance of the products, optimum adjustments and confirmation of characteristics within specification.
Adjustments should be performed in accordance with the procedures/instructions described in this manual.

3. Lubricants, Glues, and Replacement parts

Use grease and adhesives that are equal to the specified substance.
Make sure the proper amount is applied.

4. Cleaning

For parts that require cleaning, such as optical pickups, tape deck heads, lenses and mirrors used in projection monitors, proper cleaning should be performed to restore their performances.

5. Shipping mode and Shipping screws

To protect products from damages or failures during transit, the shipping mode should be set or the shipping screws should be installed before shipment. Please be sure to follow this method especially if it is specified in this manual.

• Recordable discs

Logo	Attributes
DVD-RW	12cm, single-sided, single layer disc Approx. max. recording time: 360 minutes (4.7GB)
DVD-R	12cm, double-sided, single layer disc Approx. max. recording time: 720 minutes (9.4GB)

∗ This unit does not support use of 8 cm DVD-R discs.

• CD-R/CD-RW discs cannot be recorded on this unit.

• Playback only discs

Logo
DVD video

CONTENTS

1. SPECIFICATIONS 7
1.1 SPECIFICATIONS CHECKS 7
1.2 FUNCTION MENU 9
1.3 SPECIFICATIONS 12
2. EXPLODED VIEWS AND PARTS LIST 14
2.1 PACKING 14
2.2 EXTERIOR SECTION (1/3) 16
2.3 EXTERIOR SECTION (2/3) 18
2.4 EXTERIOR SECTION (3/3) 20
2.5 REAR PANEL SECTION 22
2.6 FRONT PANEL SECTION 24
3. BLOCK DIAGRAM AND SCHEMATIC DIAGRAM 26
3.1 BLOCK DIAGRAM 26
3.1.1 OVERALL BLOCK DIAGRAM 26
3.1.2 I/O BLOCK 28
3.1.3 DECB ASSY 29
3.1.4 PCIB ASSY 30
3.1.5 AVIB ASSY 31
3.1.6 PWRB, FLKB, KEYB, DRV1B, DRV2B and USBB ASSYS 33
3.1.7 PWRB ASSY 34
3.1.8 WAVEFORMS 35
3.2 OVERALL WIRING DIAGRAM 40
3.3 JKIB ASSY (1/3) 42
3.4 JKIB ASSY (2/3) 44
3.5 JKIB ASSY (3/3) 46
3.6 JKDB and 422IB ASSYS 48
3.7 HPVB and JKOB ASSYS 50
3.8 DECB ASSY (1/2) 52
3.9 DECB ASSY (2/2) 54
3.10 PCIB ASSY (1/4) 56
3.11 PCIB ASSY (2/4) 58
3.12 PCIB ASSY (3/4) 60
3.13 PCIB ASSY (4/4) 62
3.14 AVIB ASSY (1/6) 64
3.15 AVIB ASSY (2/6) 66
3.16 AVIB ASSY (3/6) 68
3.17 AVIB ASSY (4/6) 70
3.18 AVIB ASSY (5/6) 72
3.19 AVIB ASSY (6/6) 74
3.20 PWRB(POLY) ASSY 76
3.21 FLKB(WYV/RB) ASSY 78
3.22 KEYB(WYV/RB) ASSY 80

3.23 DRV1B and DRV2B ASSYS 82
3.24 USBB ASSY 84
4. PCB CONNECTION DIAGRAM 85
4.1 JKIB, JKDB, 422IB and HPVB ASSYS 86
4.2 DECB ASSY 90
4.3 PCIB ASSY 92
4.4 AVIB ASSY 94
4.5 PWRB ASSY 98
4.6 FLKB, KEYB, DRV1B, DRV2B and USBB ASSYS 100
4.7 JKOB ASSY 104
4.8 MOTHER BOARD ASSY 105
5. PCB PARTS LIST 108
6. ADJUSTMENT 116
6.1 27MHz CLOCK ADJUSTMENT 116
7. GENERAL INFORMATION 117
7.1 DIAGNOSIS 117
7.1.1 TESTMODE 117
7.1.2 TEST MODE CODE 120
7.1.3 LED SPECIFICATIONS 122
7.1.4 POWER-ON SEQUENCE 127
7.1.5 HOW TO CHECK THE ERROR LOG 130
7.1.6 ERROR LOG DISPLAY 135
7.1.7 DEBUGGING DISPLAY MODE 139
7.1.8 LIST OF BIOS SETTING VALUE 143
7.1.9 REWRITING OF THE GUIDS 145
7.1.10 CAUTIONS ON HANDLING THE HDD 146
7.1.11 HDD REPLACEMENT PROCEDURES 148
7.1.12 HOW TO CHECK THE HDD 149
7.1.13 CLEANING 149
7.1.14 HOW TO INSTALL THE OS OR PROGRAM 150
7.1.15 TROUBLE SHOOTING 152
7.1.16 DISASSEMBLY 158
7.2 IC INFORMATION 170
8. PANEL FACILITIES 190

1. SPECIFICATIONS

1.1 SPECIFICATIONS CHECKS

■ Test Specifications

• Conditions and connections for the test

• Conditions for the test

Power voltage: PRV-LX10/WYV/RB: 220- 240V±10% AC, 50/60 Hz

Power consumption: PRV-LX10/WYV/RB: 1A max. when all optional accessories are mounted

Ambient temperature: 5-35°C, relative humidity: 85% or less

Note: Because the HDD is mounted on the unit, be sure not to impart shock or vibration to the unit while it is operating.

• Recommended media

For the test of the unit, use the following recommended media:

DVD-R: (GGV1139)
DVD-RW: (GGV1050)

• Conditions diagram

• Front panel section

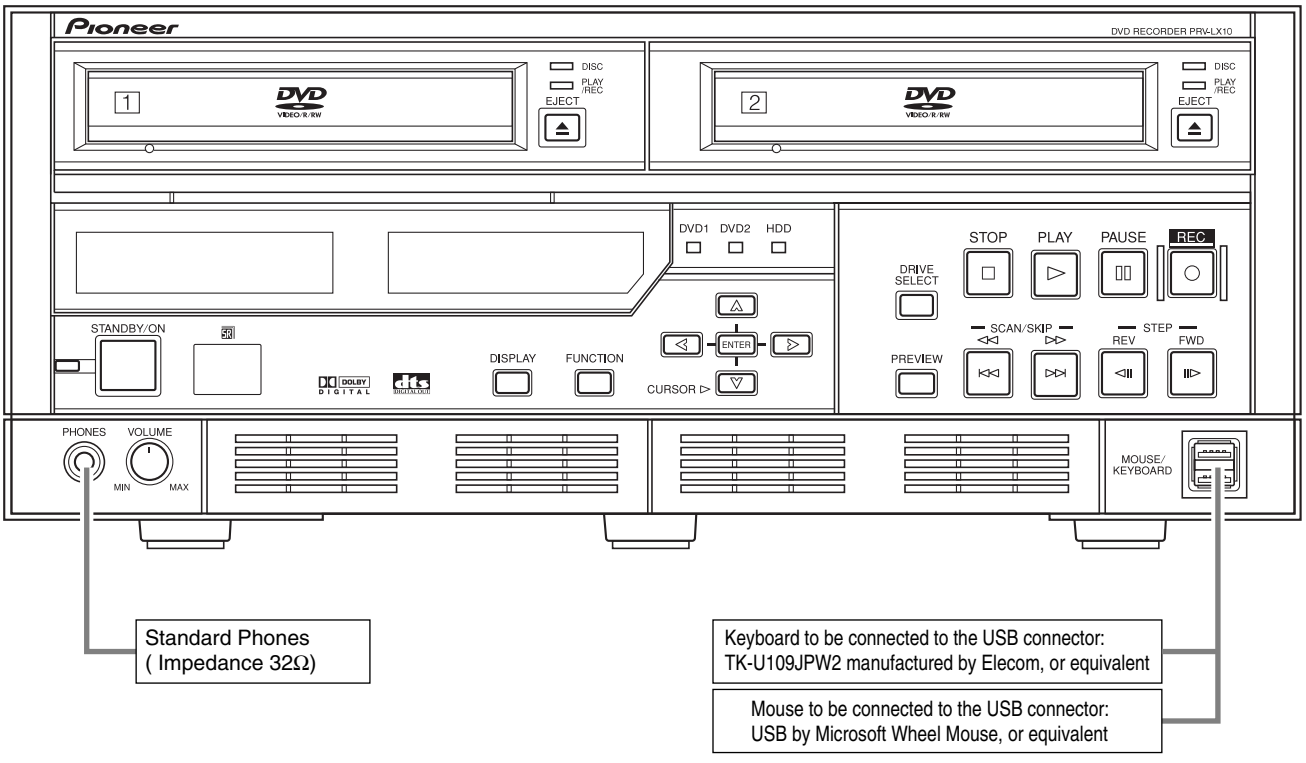

• Rear Panel section

[The connection figure of measuring instruments]

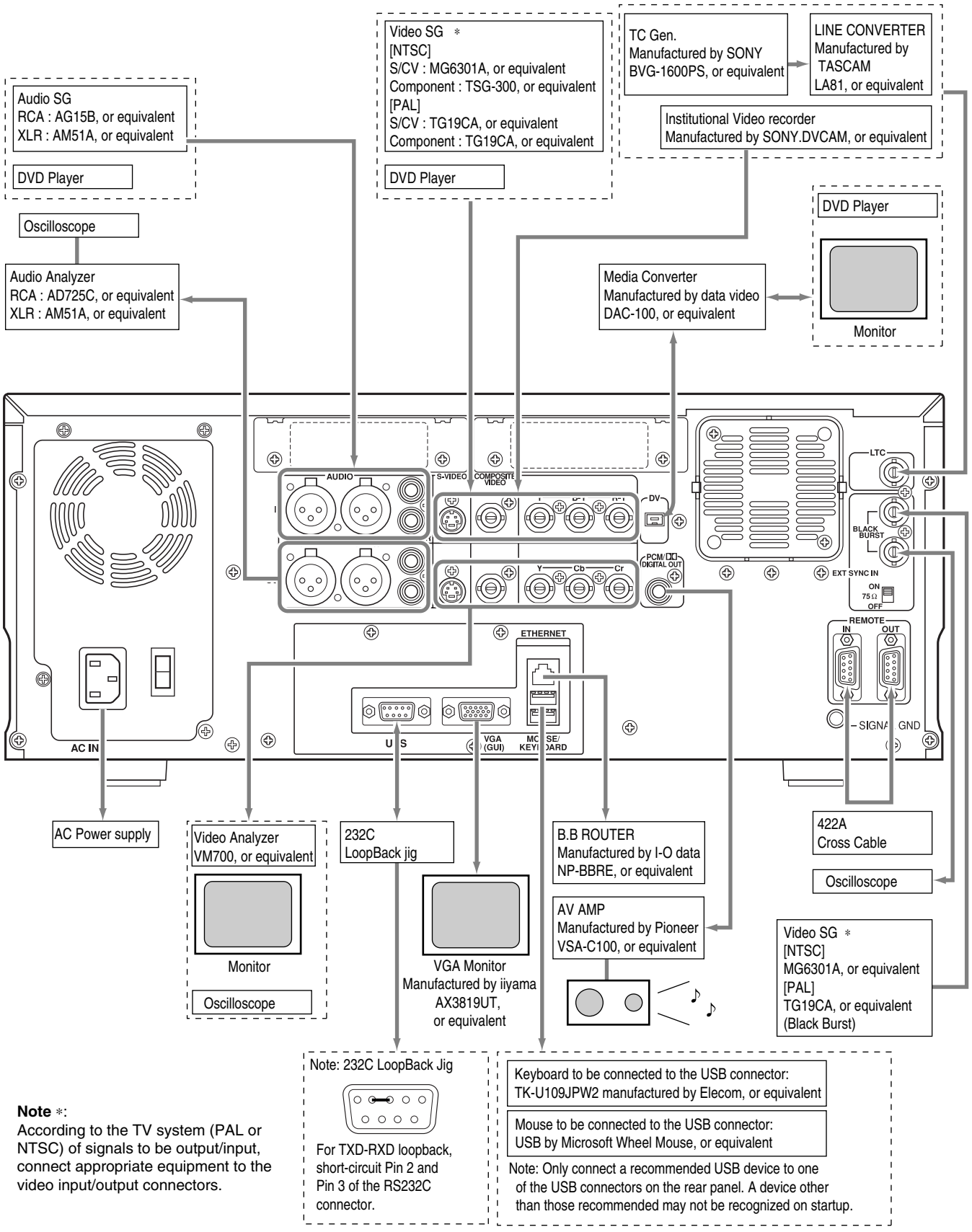

Note *:
According to the TV system (PAL or NTSC) of signals to be output/input, connect appropriate equipment to the video input/output connectors.

1.2 FUNCTION MENU

■Function Menu Prestore (reference)

Menu item				Setting
EDIT	DVD Menu	Menu Setting	Menu Edit To	hyymmdd_xx
			Menu TV System	PAL
		Menu Type / Font	Menu Type	Title Menu
			Font	Helvetica
		Menu Design	Design Select	Type A
			Thumbnail	Go to Video
			Button Text	Number
		Menu Modification	Background	Default
			Image	Default
			Disc Name	(Blank)
			Select Color	Default
			Active Color	Default
		Navigation Cmd	Introduction Clip	Disabled
			First Play PGC	Stop
			Title Post Cmd	Stop
		Del/Init Library	Type	Background
			Design Select	BG2.bmp
	Project	Record Name	Name	hyymmdd_xx
			Protect	Disabled
			Record To	HDD
			Num of Clips	0
			Num of Titles	0
			Last Modified Date	yyyy.mm.dd hh:mm:ss
			Total Capacity	0 MB
		Copy Project	Copy To	cx_hyymmdd_xx
		Copy Clip	Source Drive	HDD
			Copy From	No Item
			Clip	No Item
		Delete	Delete	No Item
	DVD Disc	Make Disc	Target	DVD 1
		Image	Target Image	hyymmdd_xx.img
APP	Auto Capture	IN/OUT Point	Preroll Time	5 Seconds
			Offsest(Frame)	-17 Frames
			Record As	Title(Stop)
			IN/OUT Point	00:00:00:00
		Chapter Point	Chapter Point	00:00:00:00
		EDL Command	Command	Finalize
		EDL	No Item	(Blank)
		EDL Load/Delete	Load	No Item
			Delete	No Item
		EDL Save	Save To	edl000.edl
	Copy/Impt/Bku	Disc Image Copy	Source	DVD 1
			Input Image Name	disc00000.img
		Image Copy/Del	Source Image	No Item
			Destination	DVD 1
		Menu Import	Type	Background
			Source	Import Directory
			Source File	No Item
		EDL Import	Source	Import Directory
			Source File	No Item

Menu item				Setting
SET UP	System	System Settings	Keyboard	English(GB)
			Key Repeat Speed	Medium
			Mouse	Generic
			Mouse Speed	Medium
			Time Zone	London
			Date(mm/dd/yyyy)	mm/dd/yyyy
			Time(hh:mm:ss)	hh:mm:ss
		F-Key Set 1 - 6	F-Key Enable	F-Key Only
			F1	Not Set
			F2	Not Set
			F3	Not Set
			F4	Not Set
			F5	Not Set
			F6	Not Set
		F-Key Set 7 - 12	F7	Not Set
			F8	Not Set
			F9	Not Set
			F10	Not Set
			F11	Not Set
			F12	Not Set
		Network	Network	OFF
			DHCP/Manual	DHCP
			MAC Address	---.---.---.---
		UPS Setting	Model	Disabled
			Shutdown Delay	30 seconds
		Information	System Version	x.xx-x/x.xx
			Power-On Time	xxxx(h)
			HDD Access	xxxx(h)
			Drive 1(R/W)	xxxx(h)/xxxx(h)
			Drive 2(R/W)	xxxx(h)/xxxx(h)
			Service Info	x
		HDD Tools	Target Drive	HDD
			Remaining Capacity	100.87(GB)
	Operation	Control Settings	Control	Local
			Port	RS-422A
			Time Code	RS-422A
			Eject Setting	Eject
		Video Settings	External Sync	Disabled
			OSD	Enabled
			Composite Out	Source Monitor
			Background Color	Black
			DV OUT	Disabled
			Test Signal	Start
		HDD Recording	Time Shift PLAY	Enabled
		Info Language	Language	English(GB)

Menu item				Setting
SETUP	Recording	Video/Audio	Video Encode Rate	9.644Mbps
			Video Filter(NR)	OFF
			Audio Encode	Dolby Digital
			Audio Level	L : +0 / R : +0
			Aspect	4:3
			Setup Level	(Blank)
		Others	Auto Chapter	Manual
			REC Button	REC Start
	Playback	Video	Aspect	4:3(LB)
			Still Mode	Frame
		Audio	Dolby Digital OUT	Dolby Digital
			DTS OUT	OFF
			96kHz PCM OUT	Convert To 48kHz
			MPEG OUT	MPEG
		Language	Audio	English
			Subtitle	English
			DVD Menu	English
		Others	Parental Level	8
			Country Code	us

TOP	STATUS	Drive	HDD
		Project	[NEW]hyymmdd_xx
		V Input	Composite
		A Input	RCA
		TV System	PAL

Factory-preset values for the main unit

• Front panel
Setting of the VOLUME control: MIN

• Rear panel
Setting of the Terminate switch: ON (upper position)

1.3 SPECIFICATIONS

• DVD RECODER [PRV-LX10]

General

Power rating	: AC 220V- 240V, 50/60 Hz
Power consumption	: Maximum 1.0 A
Power consumption during Standby	: 6.5 W
Peak inrush current (Power on)	: 30 A
Weight	: 16.5 kg (36 lb 6 oz)
External dimensions	: 427 (W) x 179.5 (H) x 539.5 (D) mm (including projecting parts) 16-13/16 (W) x 7-1/16 (H) x 21-1/4 (D) in (including projecting parts)
Ambient temperature during use	: +5 °C to +35 °C (+41 °F to +95 °F)
Ambient humidity during use	: 5 - 85% RH (without condensation)

Recording

Recording format	: DVD: DVD-Video
HDD	: VOB FILE
Recordable discs	: DVD-R
DVD-RW	

Video recording format

Sampling frequency	: 13.5 MHz
Compression	: MPEG

Audio recording format

Sampling frequency	: 48 kHz
Compression format	: Dolby Digital and Linear PCM (non-compressed)

Recording time

DVD-R/RW (manual rate)	: About 1 - 6 hours
HDD (manual rate)	: About 23 - 100 hours

Playback

Playable discs	: DVD-Video, DVD-R, DVD-RW (CD-R, CD-RW, and CD-ROM are supported for data read only)

Video input

Composite	: BNC x 1, 1.0 Vp-p, 75 Ω
S-VIDEO	: 4-pin mini DIN x 1 Y: 1.0 Vp-p, 75 Ω C: 0.286 Vp-p (NTSC), 0.300 Vp-p (PAL), 75 Ω
Component	: BNC x 3 Y: 1.0 Vp-p, 75 Ω B-Y: 0.525/0.7 Vp-p selectable (NTSC), 0.525 Vp-p (PAL), 75 Ω (with 75% color bar) R-Y: 0.525/0.7 Vp-p selectable (NTSC), 0.525 Vp-p (PAL), 75 Ω (with 75% color bar)

Video Output

Composite	: BNC x 1, 1.0 Vp-p, 75 Ω
S-VIDEO	: 4P mini DIN x 1 Y:1.0 Vp-p, 75 Ω C: 0.286 Vp-p (NTSC), 0.300 Vp-p (PAL), 75 Ω
Component	: BNC x 3 Y: 1.0 Vp-p, 75 Ω Pb: 0.7 Vp-p, 75 Ω Pr: 0.7 Vp-p, 75 Ω
S/N ratio	: Composite/S-VIDEO(Y)/Component(Y): More than 60 dB (playback)

Audio input

L, R: unbalanced:	Pin jack x 2, 2 Vrms (0 dBfs), 22 k Ω(or more)
CH1 (L), CH2 (R)	: balanced: XLR (female) x 2, +4 dBu, 600Ω

Audio output

L, R: unbalanced	: Pin jack x 2, 2 Vrms (0 dBfs), 1.5 k Ω(or less)
Frequency response	: 4 Hz to 22 kHz (DVD fs: 48 kHz)
S/N ratio	: More than 60 dB
Distortion (THD+N)	: Less than 0.02 %
CH1 (L), CH2 (R): balanced	: XLR (male) x 2, 0 dBu, 600 Ω load, low-impedance
Frequency response	: 4 Hz to 22 kHz (DVD fs: 48 kHz)
S/N ratio	: More than 60 dB
Distortion (THD+N)	: Less than 0.02 %
Digital: unbalanced	: Pin jack x 1, 0.5 Vp-p, 75 Ω

External Sync Input

: BNC x 2, black burst, 0.286 Vp-p (NTSC), 0.300 Vp-p (PAL), 75 Ω (ON/OFF)

Other:

DV input/output	: 4 pin (i.Link/IEEE 1394 compatible) x 1
LTC input	: BNC x 1, 0.5-8 Vp-p, 3 kΩ
Remote input	: D-sub 9-pin (female) RS-422A compatible x 1 (Inch threads)
Remote output	: D-sub 9-pin (female) RS-422A compatible x 1 (Inch threads)
UPS control	: D-sub 9-pin (male) RS-232C compatible x 1 (Inch threads)
VGA output	: Mini D-sub 15-pin (female) x 1 (Inch threads)
Mouse/keyboard connectors	: 4P type A (USB 2.0 compatible) x 4
Ethernet	: 8P type (IEEE802.3 compatible, category 5) x 1

Accessories:

Remote control unit	1
AA batteries	2
Air filter replacement set	1
Power cord	1
Ferrite core	1
Operating Instructions	1
GE Sub Manual	1

● *Specifications and appearance are subject to change without notice.*

[Accessories]

Air filter replacement set:

Air filter: x4
(DEC2530)

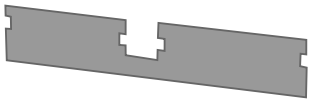

Air Filter Replacement Instructions and Precautions: x1
(DRH1078)

Power cord: x1
(ADG1214)

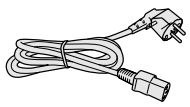

Ferrite core: x1
(DTX1007)

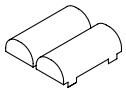

Operating Instructions: x1
GE Sub Manual: x1

Remote control unit : x1
(DXX2527)

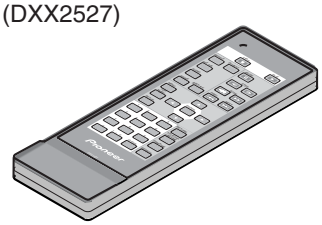

AA batteries (R6P,AA): x2

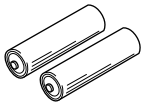

2. EXPLODED VIEWS AND PARTS LIST

NOTES:
- *Parts marked by "NSP" are generally unavailable because they are not in our Master Spare Parts List.*
- *The ⚠ mark found on some component parts indicates the importance of the safety factor of the part. Therefore, when replacing, be sure to use parts of identical designation.*
- *Screws adjacent to ▼ mark on product are used for disassembly.*
- *For the applying amount of lubricants or glue, follow the instructions in this manual. (In the case of no amount instructions, apply as you think it appropriate.)*

2.1 PACKING

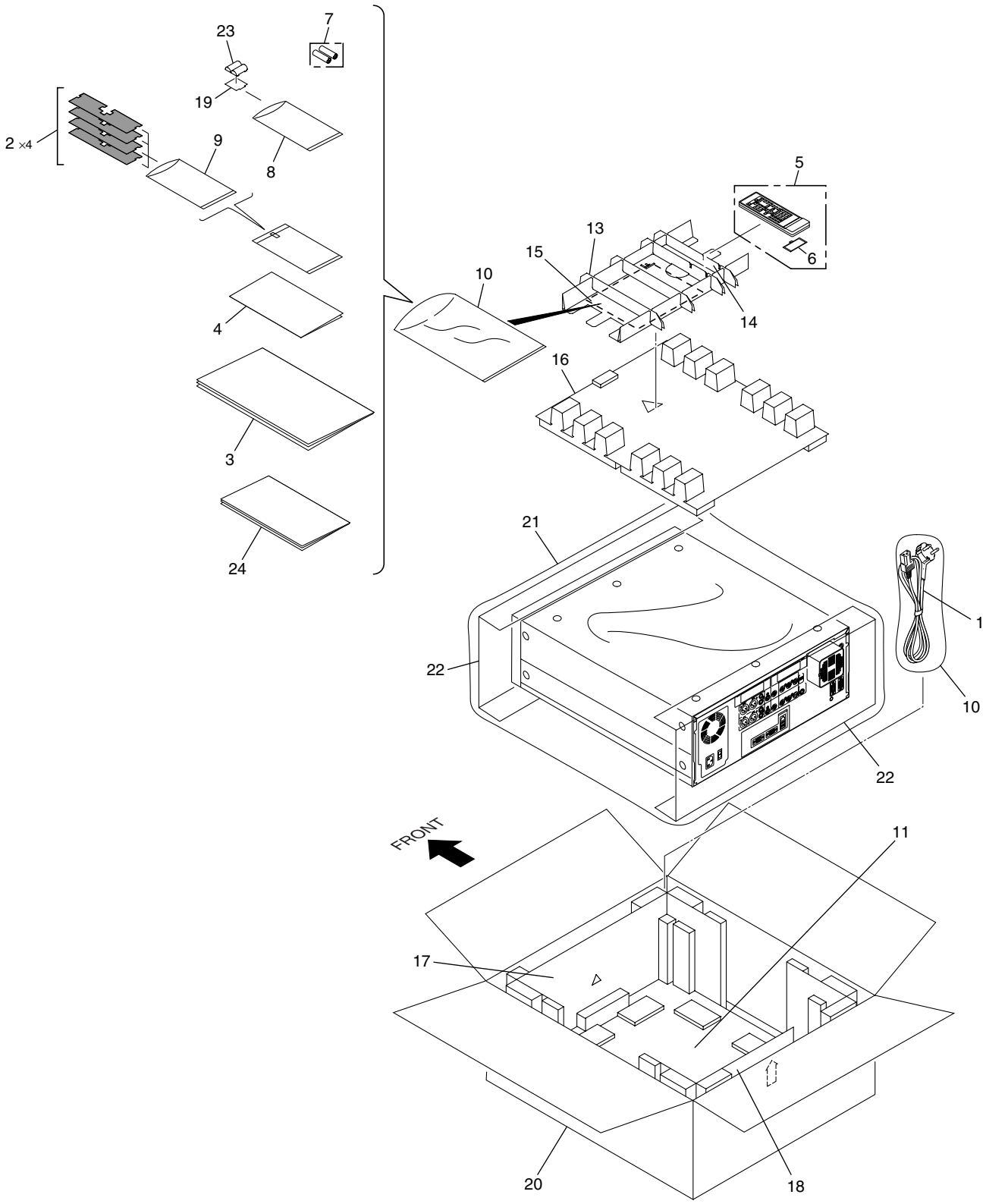

PACKING Parts List

Mark	No.	Description	Part No.
⚠	1	Power Cord	ADG1214
	2	Air Filter	DEC2530
	3	Operating Instructions (English/French)	DRE1028
	4	Air Filter Replacement Instructions and Precautions (EU)	DRH1078
	5	Remote Control Unit	DXX2527
	6	Battery Cover	VNK4403
NSP	7	Dry Cell Battery (R6P, AA)	VEM1031
NSP	8	Polyethylene Bag (60 x 120 x 0.03)	Z21-004
NSP	9	Polyethylene Bag (100 x 230 x 0.018)	Z21-010
NSP	10	Polyethylene Bag (235 x 320 x 0.06)	Z21-019
	11	Bottom Pad	DHA1571
	12	•••••	
	13	Accessory Plate	DHA1651
	14	Accessory Plate 2	DHA1652
	15	Accessory Base	DHA1653
	16	Top Pad 2	DHA1655
	17	F Pad 2	DHA1656
	18	R Pad 2	DHA1657
	19	FE Sheet 2	DHA1675
	20	Packing Case EU	DHG2456
	21	Mirror Mat Bag	DHL1124
	22	Packing Sheet	RHC1052
	23	Ferrite Core	DTX1007
NSP	24	GE Sub Manual	DRH1084

2.2 EXTERIOR SECTION (1/3)

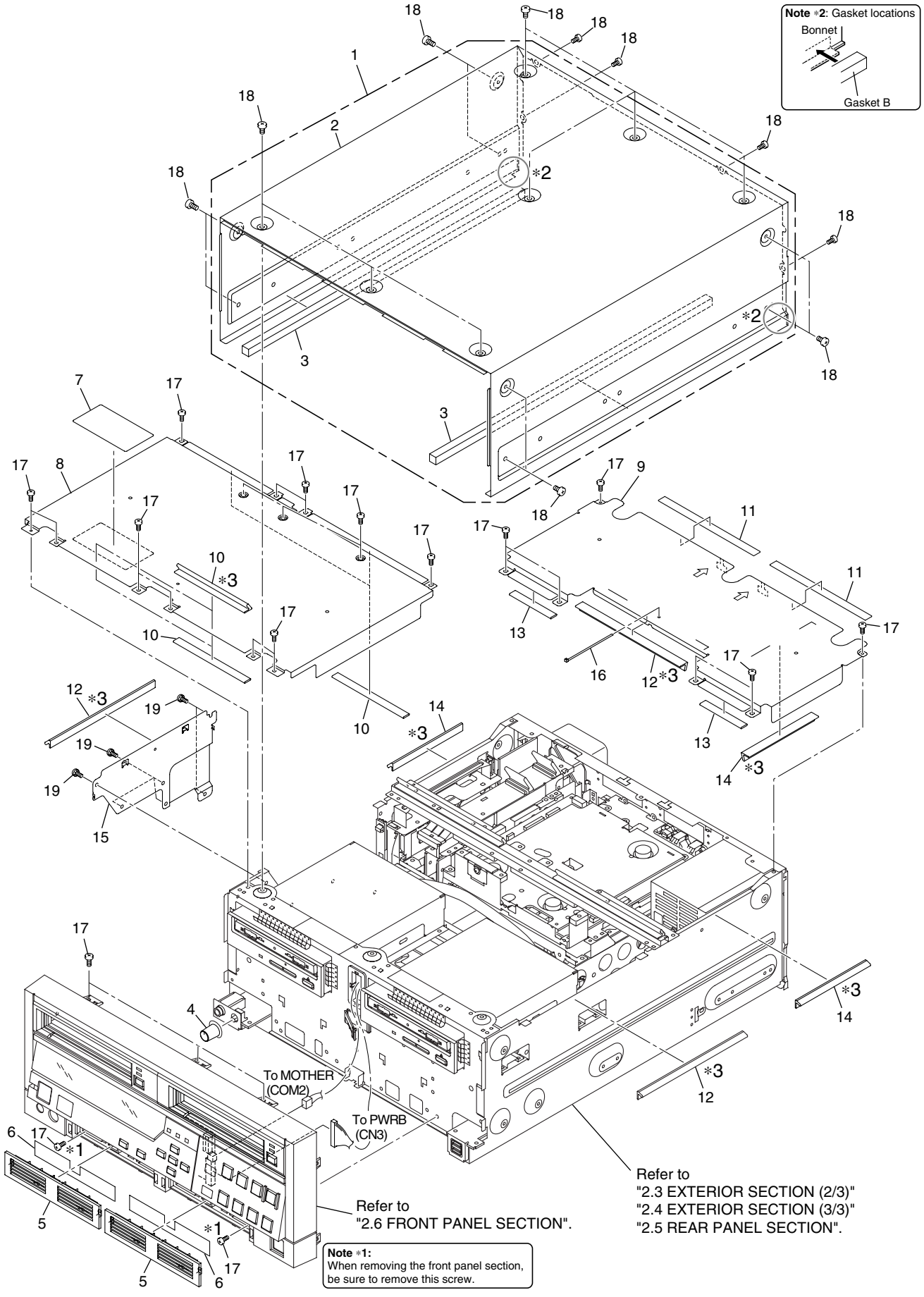

EXTERIOR SECTION Parts List

Mark	No.	Description	Part No.
	1	Bonnet Assy	DXA2021
NSP	2	Bonnet	DNE1502
	3	Gasket B	DEC2738
	4	Volume Knob 2	DAC2175
	5	Filter Cover	DNV1036
	6	Air Filter	DEC2530
	7	Panel Caution Label EU	DRW2236
NSP	8	Inner Cover F	DNE1520
NSP	9	Inner Cover R	DNE1521
	10	Gasket ICF	DEC2739
	11	Gasket ICR1	DEC2740
	12	Gasket RB	DEC2742
	13	Gasket ICR2	DEC2800
	14	Gasket C3	DEC2801
NSP	15	Side Cover	DNE1503
	16	Binder	ZCA-SKB90BK
	17	Screw	BBZ30P060FMC
	18	Screw	BMZ40P080FZK
	19	Screw	DBA1258

Note ∗3: Notes on locations where gaskets are adhered
At the locations where gaskets are to be adhered on each part, engraved marks are provided.

(a) Rectangular gaskets
Adhere a rectangular gasket by aligning it with the engraved corner marks. If no marks are provided on the part, adhere the gasket aligned with the four corners of the part.

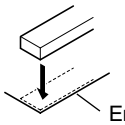

Engraved mark

(b) L-shaped gaskets
Adhere an L-shaped gasket by aligning the outer corner of the gasket with the engraved mark on the part. In cases of the chassis and side covers, adhere the gasket by aligning both ends of the gasket with the two engraved marks. If no marks are provided on the part, adhere the gasket by referring to the corresponding "Exploded views".

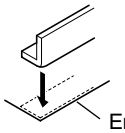

Engraved mark

2.3 EXTERIOR SECTION (2/3)

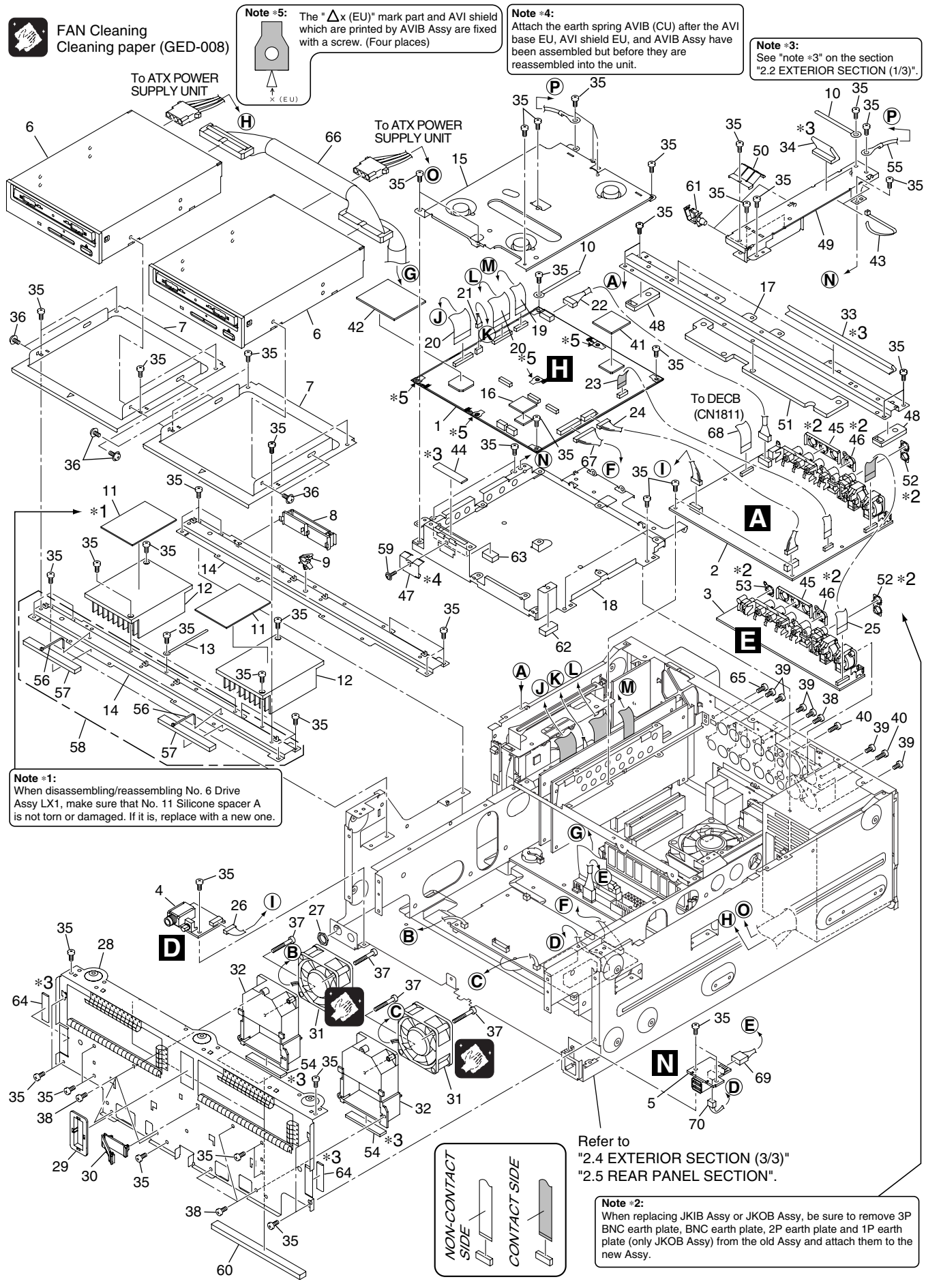

Mark	No.	Description	Part No.
	1	AVIB Assy	DWV1202
	2	JKIB Assy	DWZ1126
	3	JKOB Assy	DWZ1127
	4	HPVB Assy	DWZ1128
	5	USBB Assy	DWZ1159
⚠	6	DRIVE Assy LX1	DXX2532
NSP	7	Drive Base	DNH2548
	8	Flat Cable Clamp	DEC2534
NSP	9	Wire Saddle	DEC2543
	10	Cord Holder	RNH-184
	11	Silicone Spacer A	DEB1600
	12	Heat Sink	DNG1087
	13	Cord Holder	RNH1005
NSP	14	Front Bridge	DNE1525
NSP	15	AVI Shield	DNE1505
	16	Radiation Sheet L	VEB1332
NSP	17	Rear Bridge EU	DNE1526
NSP	18	AVI Base EU	DNE1504
	19	Flexible Cable (30P)	DDD1229
	20	Flexible Cable (50P)	DDD1226
	21	Connector Assy 4P	DKP3640
	22	Housing Assy 6P	DKP3658
	23	Flexible Cable (20P)	DDD1228
	24	Connector Assy 7P	DKP3639
	25	Flexible Cable (30P)	DDD1230
	26	Connector Assy 8P	DKP3643
	27	Nut	NKX2FUC
NSP	28	Panel Stay Assy	DNE1501
NSP	29	Protector	DNK1340
	30	Flat Cable Clamp	DEC1850
⚠	31	DC Fan Motor	AXM7014
NSP	32	Fan Duct EU	DNK4447
	33	Gasket RB	DEC2742
	34	Gasket FC	DEC2802
	35	Screw	BBZ30P060FMC
	36	Screw	AMZ30P060FZK
	37	Screw	BPZ30P350FZK
	38	Screw	BPZ30P080FZK
	39	Screw	BBT30P060FZK
	40	Screw	PPZ30P100FMC
	41	EMC Sheet S	DEB1624
	42	EMC Sheet	DEB1620
	43	Binder	DEC2803
	44	Gasket AVI	DEC2747
	45	3P BNC Earth Plate (CU)	DBK1273
	46	BNC Earth Plate (CU)	DBK1274
	47	Earth Spring AVIB (CU)	DBK1275
	48	Cover Sheet BR	DEC2834
NSP	49	Flexible Cover	DNE1506
	50	FC Earth Metal (CU)	DBK1278
	51	Cover Sheet BC	DEC2833
	52	2P Earth Plate	ANK1156
	53	1P Earth Plate	ANK1228
	54	Gasket Fan	DEC2741
NSP	55	Earth Lead Jumper	DE006VD0
	56	Binder	ZCA-SKB90BK
	57	Gasket C1	DEC2745
	58	Front Bridge Assy	DXA2031
	59	Screw	AMZ30P060FMC
	60	Cover Sheet FC	DEC2837
	61	Locking Wire Saddle	DEC1305
	62	Cover Sheet AV1	DEC2835
	63	Cover Sheet AV2	DEC2836
	64	Gasket PS	DEC2744
	65	Screw	BCZ30P060FNI
	66	Connector 40P	DKP3671
	67	Connector 14P	DKP3636
	68	Flexible Cable 30P	DDD1229
	69	Connector 10P	DKP3646
	70	Connector 3P	DKP3655

2.4 EXTERIOR SECTION (3/3)

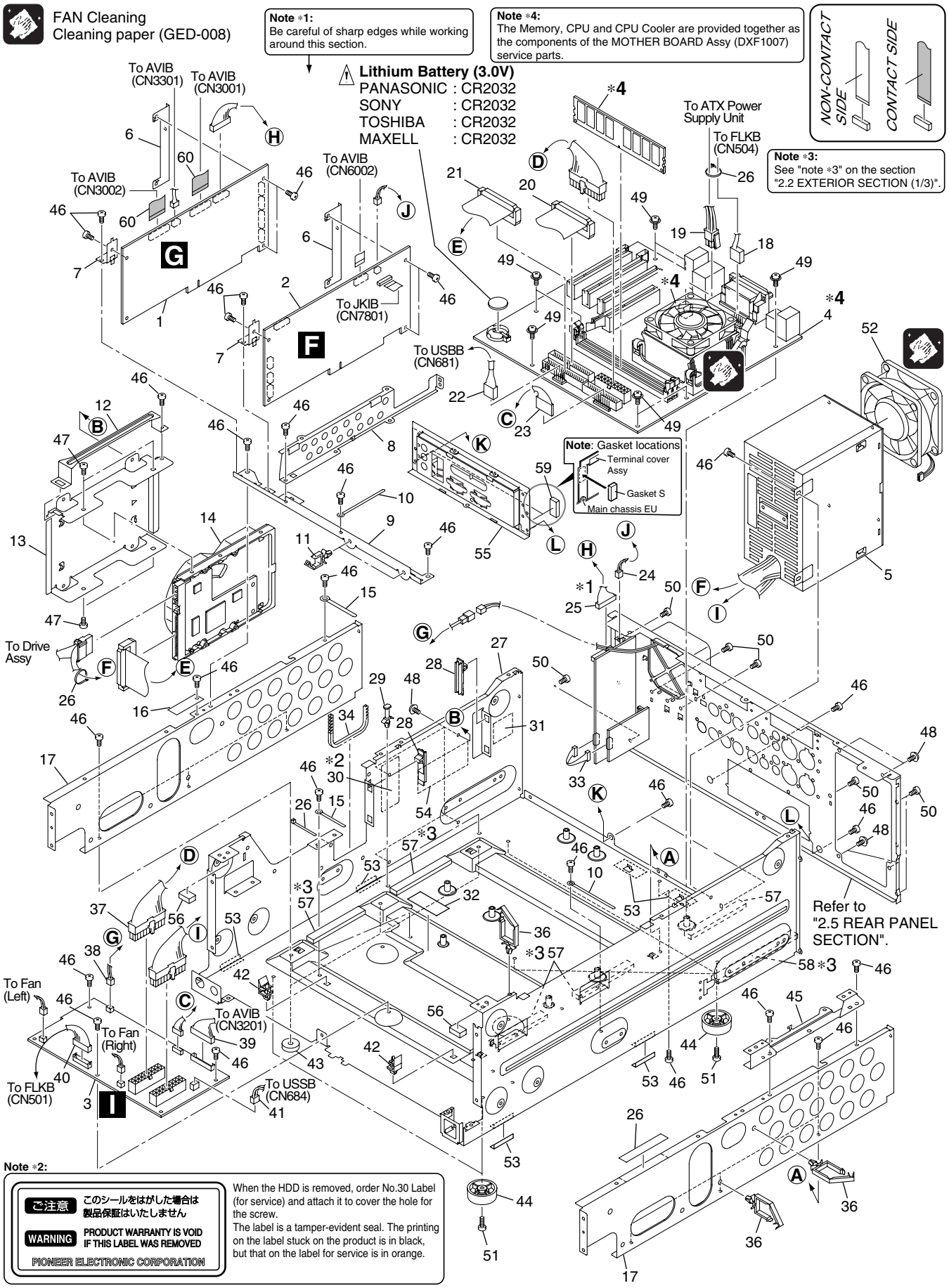

Mark	No.	Description	Part No.
	1	PCIB Assy	DWP1080
	2	DECB Assy	DWP1081
	3	PWRB (POLY) Assy	DWZ1129
⚠	4	MOTHER BOARD Assy	DXF1007
⚠	5	ATX Power Supply Unit	DXF1005
NSP	6	Board Stay R	DNF1677
NSP	7	Board Stay F	DNF1679
NSP	8	PCI Cover	DNE1449
NSP	9	Center Stay	DNE1444
	10	Cord Holder	RNH1005
	11	Locking Wire Saddle	DEC1717
NSP	12	HDD Handle	DNE1450
NSP	13	HDD Base	DNH2549
⚠	14	HDD 120G 4R120L0	VXF1016
	15	Cord Holder	RNH-184
	16	Edge Sheet	DEC2567
NSP	17	FR Plate	DND1246
	18	Connector Assy 10P-3P	DKP3645
	19	Connector Assy 4P	DKP3656
	20	Connector Assy 40P	DKP3671
	21	Connector Assy 40P	DKP3647
	22	Connector Assy 10P	DKP3646
	23	Connector Assy 9P-6P	DKP3635
	24	Connector Assy 2P	DKP3638
	25	Connector Assy 11P	DKP3642
	26	Binder	ZCA-SKB90BK
NSP	27	Main Chassis EU	DNA1312
NSP	28	PCB Support	VEC1267
	29	Card Spacer	QEC1012
	30	Label (for service)	BAX1238
NSP	31	Label	VRW-348
	32	Lithium Battery Caution Label	DRW2162
	33	Connector Assy 6P	DKP3644
	34	Edge Guard A	DEC2566
NSP	35	Wire Saddle	DEC2543
NSP	36	Wire Saddle (8S)	DEC1760
	37	Connector Assy 20P	DKP3657
	38	Connector Assy 2P	DKP3736
	39	Connector Assy 14P	DKP3636
	40	Connector Assy 20P	DKP3637
	41	Connector Assy 3P	DKP3655
NSP	42	Card Edge Spacer	DEC1211
	43	Screw Guard	DEB1447
	44	Leg	DEC2583
NSP	45	Jack Stay	DNE1446
	46	Screw	BBZ30P060FMC
	47	Screw	DBA1125
	48	Screw	AMZ30P060FZK
	49	Screw	BMP30P060FNI
	50	Screw	BBT30P060FZK
	51	Screw	BBZ30P100FMC
⚠	52	DC Fan Motor	DZM1001
	53	Driver Sheet Assy	VEC2242
	54	Caution Label (EU)	DRW2214
NSP	55	Terminal Cover Assy	DNE1539
	56	Cover Sheet FR	DEC2838
	57	Gasket C1	DEC2745
	58	Gasket C2	DEC2746
	59	Gasket S	DEC2855
	60	Flexible Cable 50P	DDD1226

2.5 REAR PANEL SECTION

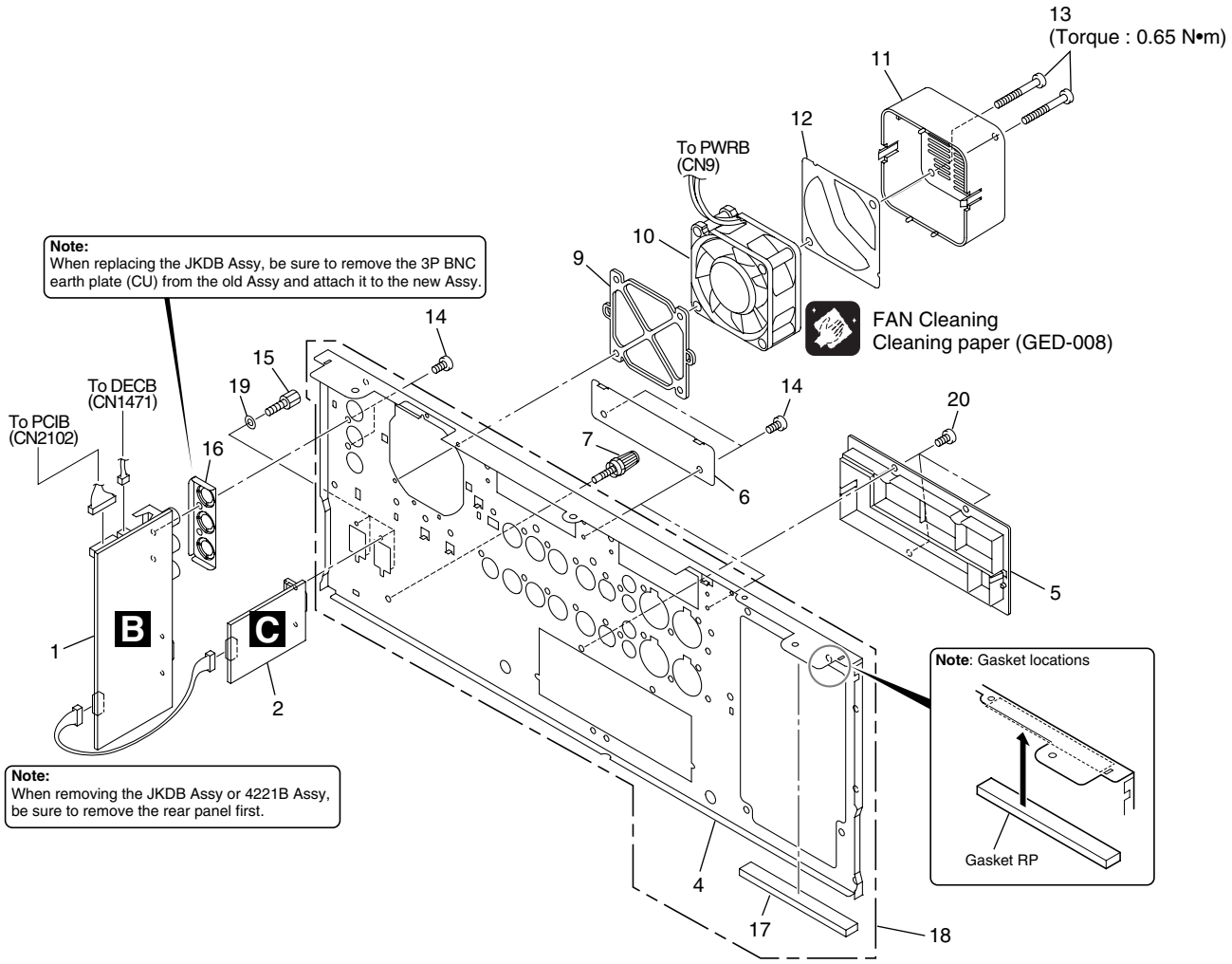

REAR PANEL SECTIN Parts List

Mark	No.	Description	Part No.
	1	JKDB Assy	DWZ1134
	2	422IB Assy	DWZ1133
	3	•••••	
NSP	4	Rear Panel	DNC1703
NSP	5	Terminal Cover	DNK4154
NSP	6	Blind Plate	DNF1678
	7	Earth Terminal	DKE-102
NSP	8	Guard Tape	DEC2587
	9	Fan Spacer	AMR7265
⚠	10	DC Fan Motor	AXM7014
	11	Fan Cover	AMR7264
	12	Fan Plate	DEC2692
	13	Screw	ABA7003
	14	Screw	BBT30P060FZK
	15	Screw	BBA1051
	16	3P BNC Earth Plate (CU)	DBK1273
	17	Gasket RP	DEC2743
	18	Rear Panel Assy	DXA2022
	19	Washer	WH30FNI
	20	Screw	BBZ30P060FMC

2.6 FRONT PANEL SECTION

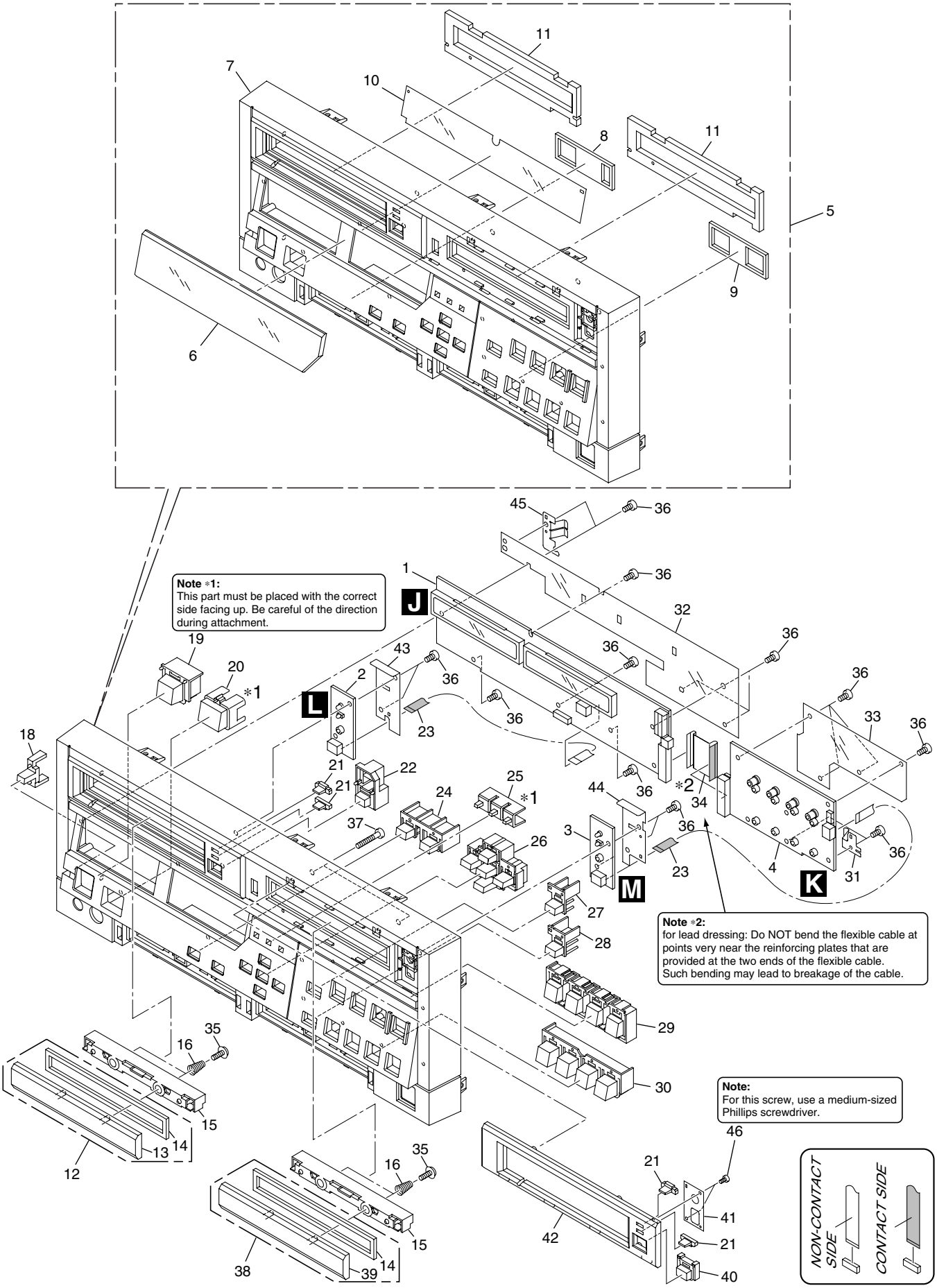

Mark	No.	Description	Part No.
	1	FLKB(WYV/RB) Assy	DWZ1164
	2	DRV1B Assy	DWZ1160
	3	DRV2B Assy	DWZ1161
	4	KEYB(WYV/RB) Assy	DWZ1157
	5	Front Panel EU Assy	DXA2023
NSP	6	FL Window	DAK1001or DEC2849
NSP	7	Front Panel EU	DAX1014
NSP	8	Air Seal A	DED1164
NSP	9	Air Seal B	DED1165
NSP	10	FL Filter	DEC2531
	11	Drive Filter	DED1163
	12	Tray Panel 1 Assy	DXA1961
NSP	13	Tray Panel 1	DNV1037
NSP	14	Tray Filter	DEC2528
	15	Tray Holder	DNV1038
	16	Tray Spring	DBH1515
	17	•••••	
	18	Power Lens	DNV1043
	19	Power Button	DAC2105
	20	IR Window	DNV1042
	21	Drive Lens	DNV1039
	22	Tray Button 1	DAC2099
	23	Flexible Cable (6P)	DDD1231
	24	ETC Button	DAC2103
	25	Drive Select Lens	DNV1041
	26	Cursor Button	DAC2104
	27	Drive Select Button	DAC2102
	28	Preview Button	DAC2107
	29	Play Button 1	DAC2100
	30	Play Button 2	DAC2101
	31	Earth Metal B (CU)	DBK1277
	32	Barrier FL	DEC2748
	33	Barrier 2	DEC2533
	34	Flexible Cable (25P)	DDD1232
	35	Screw	VBA1034
	36	Screw	BPZ30P080FZK
	37	Screw	BPZ30P250FMC
	38	Tray Panel 2 Assy	DXA1962
NSP	39	Tray Panel 2	DNV1044
	40	Tray Button 2	DAC2110
	41	Drive Lens Support Plate	DEC2536
	42	Drive 2 Panel	DNV1045
	43	Barrier D1	DEC2765
	44	Barrier D2	DEC2766
	45	Earth Metal F (CU)	DBK1276
	46	Screw	BPZ20P060FZK

3. BLOCK DIAGRAM AND SCHEMATIC DIAGRAM

3.1 BLOCK DIAGRAM

3.1.1 OVERALL BLOCK DIAGRAM

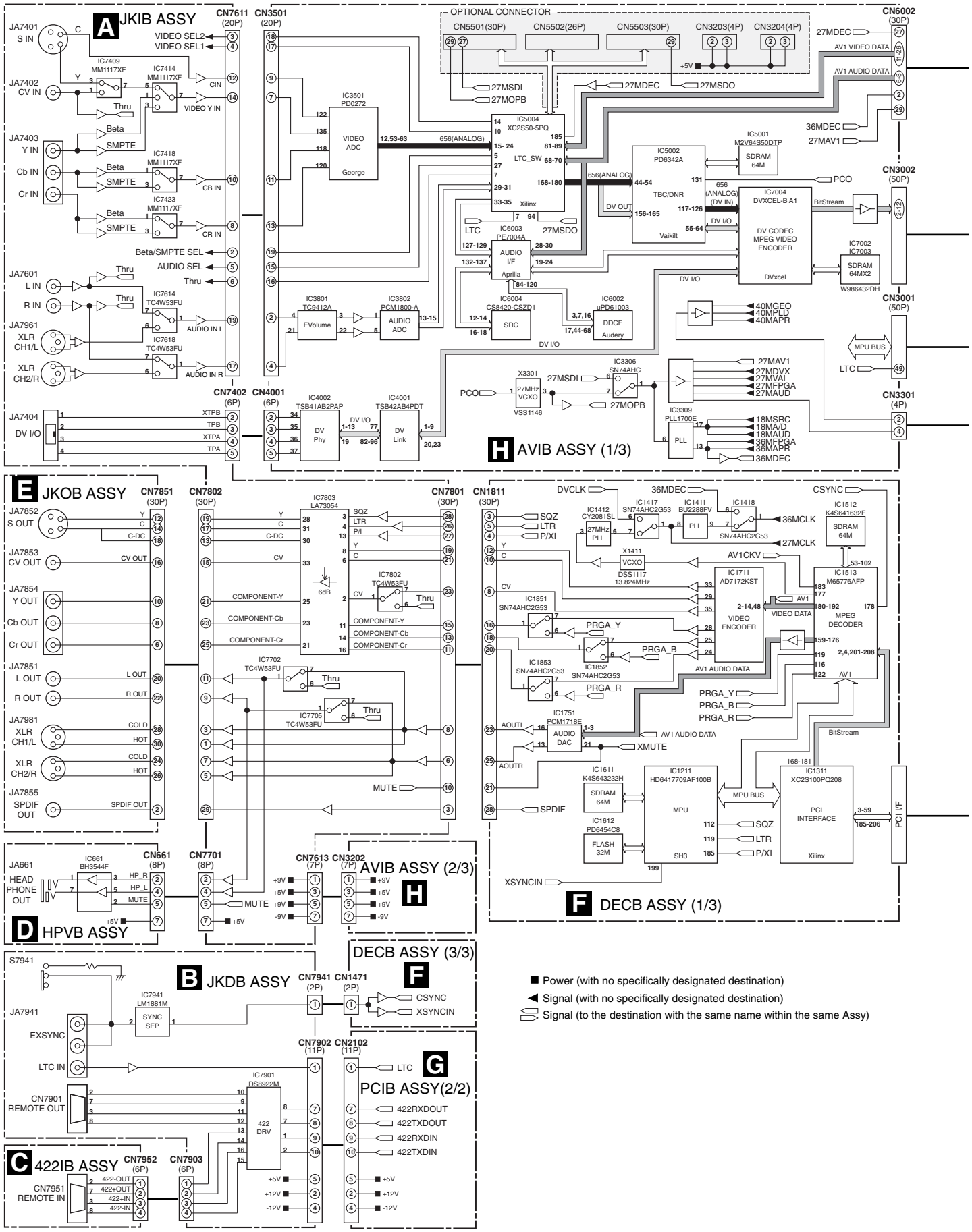

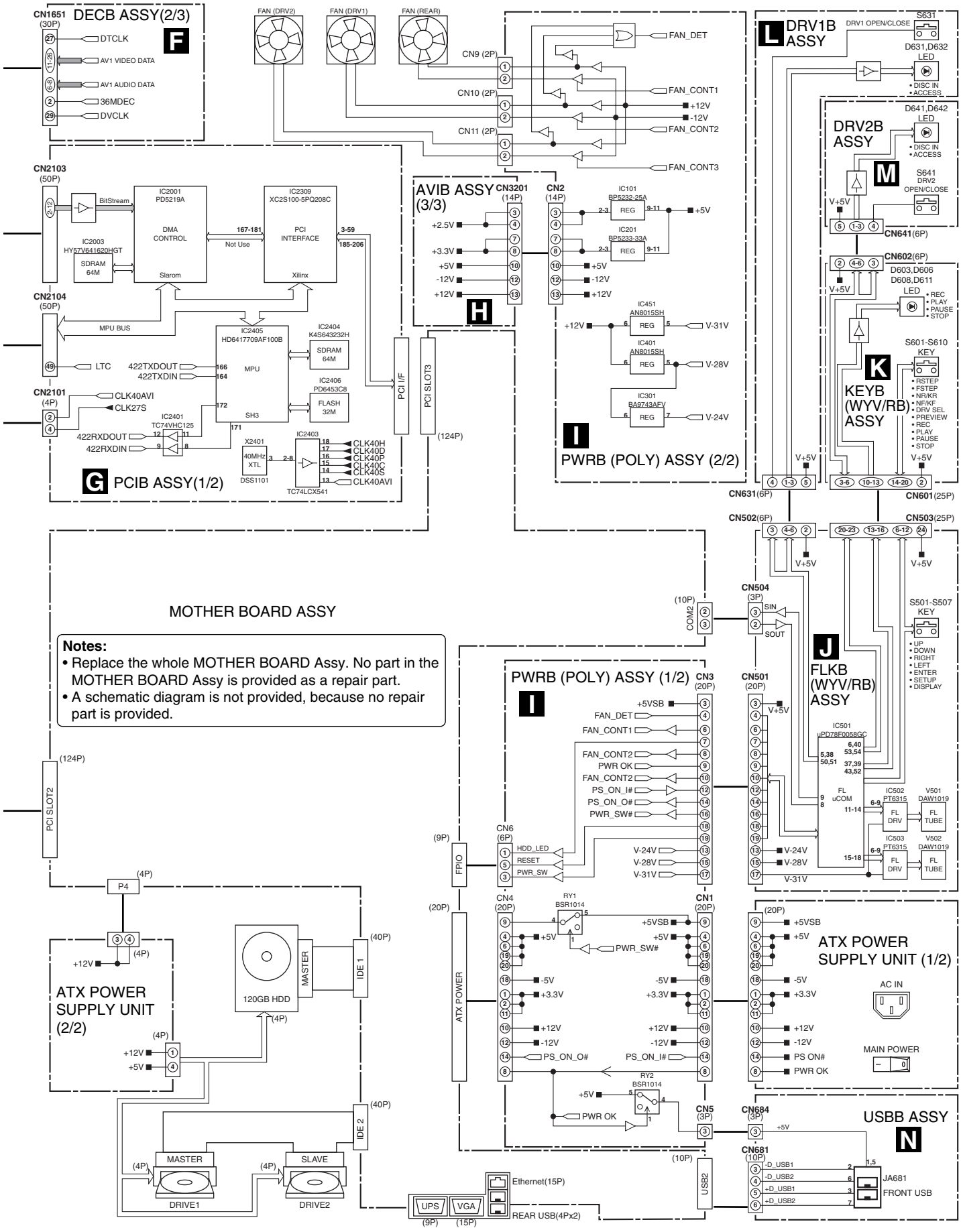
DECB ASSY(2/3)
F
CN1651 (30P)
DTCLK
AV1 VIDEO DATA
AV1 AUDIO DATA
36MDEC
DVCLK
FAN (DRV2)
FAN (DRV1)
FAN (REAR)
CN9 (2P)
CN10 (2P)
CN11 (2P)
FAN_DET
FAN_CONT1
+12V
-12V
FAN_CONT2
FAN_CONT3
CN2103 (50P)
CN2104 (50P)
CN2101 (4P)
IC2001 PD5219A
DMA CONTROL
Slarom
BitStream
IC2003 HY57V641620HGT
SDRAM 64M
167-181
Not Use
IC2309 XC2S100-5PQ208C
PCI INTERFACE
Xilinx
3-59
185-206
MPU BUS
LTC
IC2405 HD6417709AF100B
MPU
422TXDOUT
422TXDIN
166
164
172
171
IC2404 K4S643232H
SDRAM 64M
IC2406 PD6453C8
FLASH 32M
SH3
CLK40AVI
CLK27S
IC2401 TC74VHC125
422RXDOUT
422RXDIN
X2401
40MHz XTL
DSS1101
IC2403
TC74LCX541
CLK40H
CLK40D
CLK40P
CLK40C
CLK40S
CLK40AVI
G PCIB ASSY(1/2)
PCI I/F
PCI SLOT3
(124P)
AVIB ASSY (3/3)
H
CN3201 (14P)
CN2 (14P)
+2.5V
+3.3V
+5V
-12V
+12V
IC101 BP5232-25A
IC201 BP5233-33A
REG
2-3
9-11
IC451 AN8015SH
IC401 AN8015SH
IC301 BA9743AFV
V-31V
V-28V
V-24V
I PWRB (POLY) ASSY (2/2)
L DRV1B ASSY
DRV1 OPEN/CLOSE
S631
D631,D632 LED
• DISC IN
• ACCESS
M DRV2B ASSY
D641,D642 LED
S641 DRV2 OPEN/CLOSE
CN641(6P)
CN602(6P)
D603,D606
D608,D611 LED
• REC
• PLAY
• PAUSE
• STOP
K KEYB (WYV/RB) ASSY
S601-S610 KEY
• RSTEP
• FSTEP
• NR/KR
• NF/KF
• DRV SEL
• PREVIEW
• REC
• PLAY
• PAUSE
• STOP
CN631(6P)
CN601(25P)
CN502(6P)
CN503(25P)
MOTHER BOARD ASSY
Notes:
• Replace the whole MOTHER BOARD Assy. No part in the MOTHER BOARD Assy is provided as a repair part.
• A schematic diagram is not provided, because no repair part is provided.
PCI SLOT2
(124P)
P4
(4P)
ATX POWER SUPPLY UNIT (2/2)
120GB HDD
MASTER
IDE 1
(40P)
IDE 2
SLAVE
DRIVE1
DRIVE2
PWRB (POLY) ASSY (1/2)
I
CN3 (20P)
CN6 (6P)
CN4 (20P)
CN1 (20P)
CN5 (3P)
FP/O
ATX POWER
HDD_LED
RESET
PWR_SW
RY1 BSR1014
RY2 BSR1014
PS_ON_O#
PS_ON_I#
PWR OK
PWR_SW#
CN504 (3P)
COM2
SIN
SOUT
J FLKB (WYV/RB) ASSY
S501-S507 KEY
• UP
• DOWN
• RIGHT
• LEFT
• ENTER
• SETUP
• DISPLAY
CN501 (20P)
IC501 uPD78F0058GC
FL uCOM
IC502 PT6315
IC503 PT6315
V501 DAW1019
V502 DAW1019
FL DRV
FL TUBE
ATX POWER SUPPLY UNIT (1/2)
AC IN
MAIN POWER
PS ON#
CN684 (3P)
CN681 (10P)
USBB ASSY
N
USB2
-D_USB1
-D_USB2
+D_USB1
+D_USB2
JA681
FRONT USB
UPS
VGA
Ethernet(15P)
REAR USB(4Px2)
(9P)
(15P)

3.1.2 I/O BLOCK

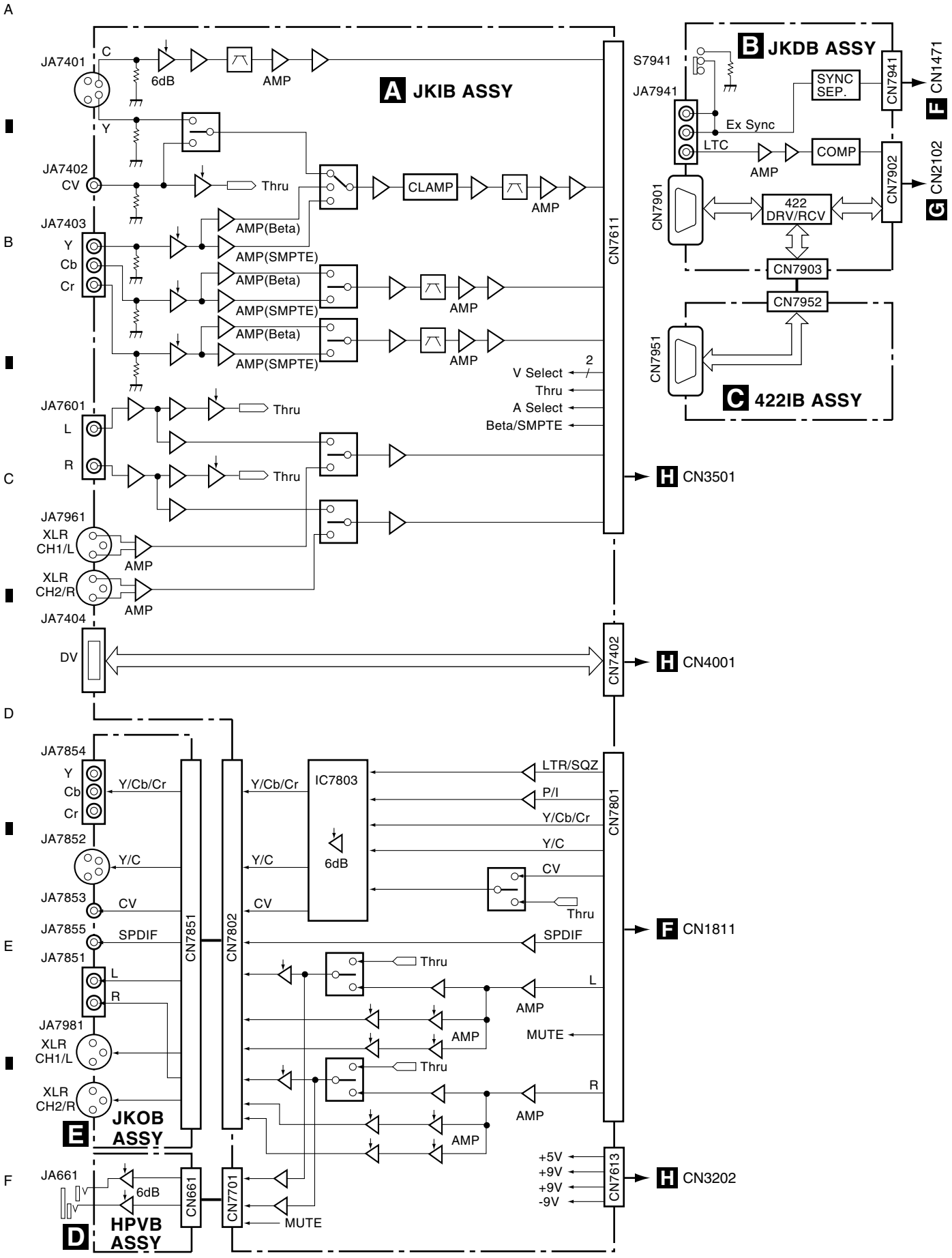
A JKIB ASSY
B JKDB ASSY
C 422IB ASSY
D HPVB ASSY
E JKOB ASSY
JA7401
JA7402
JA7403
JA7601
JA7961
JA7404
JA7854
JA7852
JA7853
JA7855
JA7851
JA7981
JA661
6dB
AMP
Thru
CLAMP
AMP(Beta)
AMP(SMPTE)
V Select
A Select
Beta/SMPTE
CN7611
CN7402
CN7801
CN7851
CN7802
CN7701
CN661
IC7803
LTR/SQZ
P/I
Y/Cb/Cr
Y/C
CV
SPDIF
MUTE
CN7613
+5V
+9V
-9V
S7941
JA7941
Ex Sync
LTC
SYNC SEP.
COMP
CN7941
CN7902
CN7901
422 DRV/RCV
CN7903
CN7952
CN7951
H CN3501
H CN4001
F CN1811
H CN3202
F CN1471
G CN2102

3.1.3 DECB ASSY

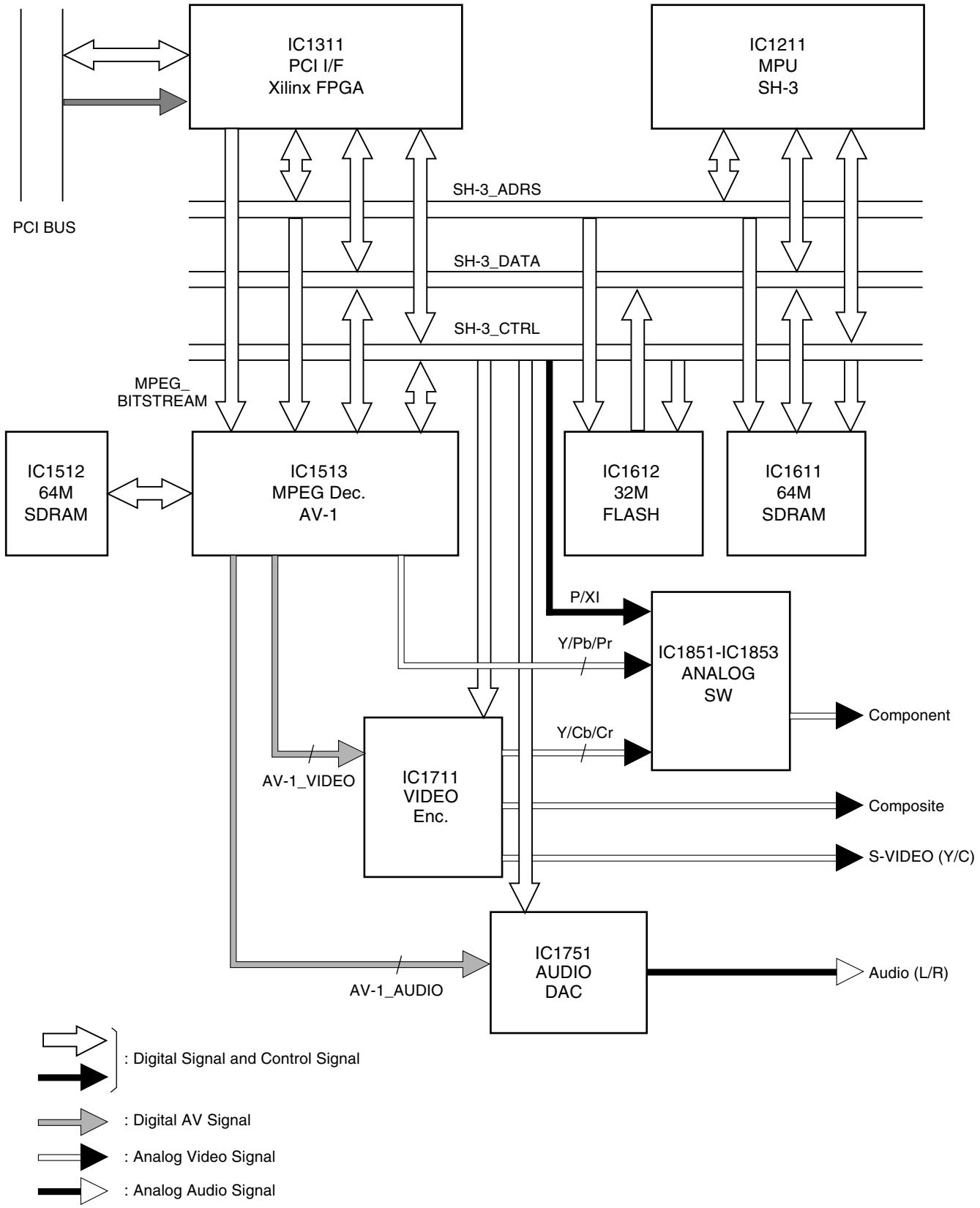

3.1.4 PCIB ASSY

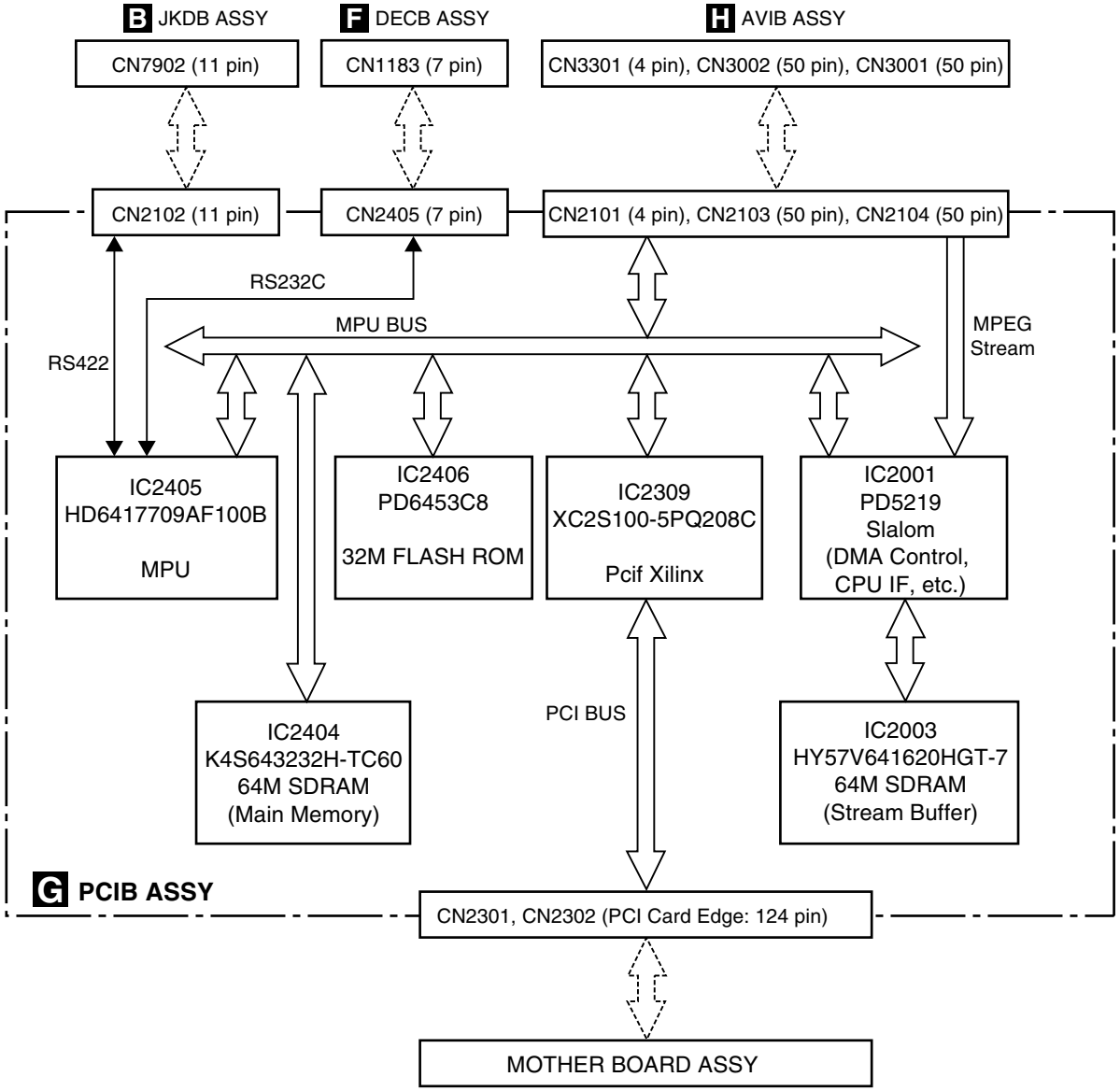

3.1.5 AVIB ASSY

● Video Section

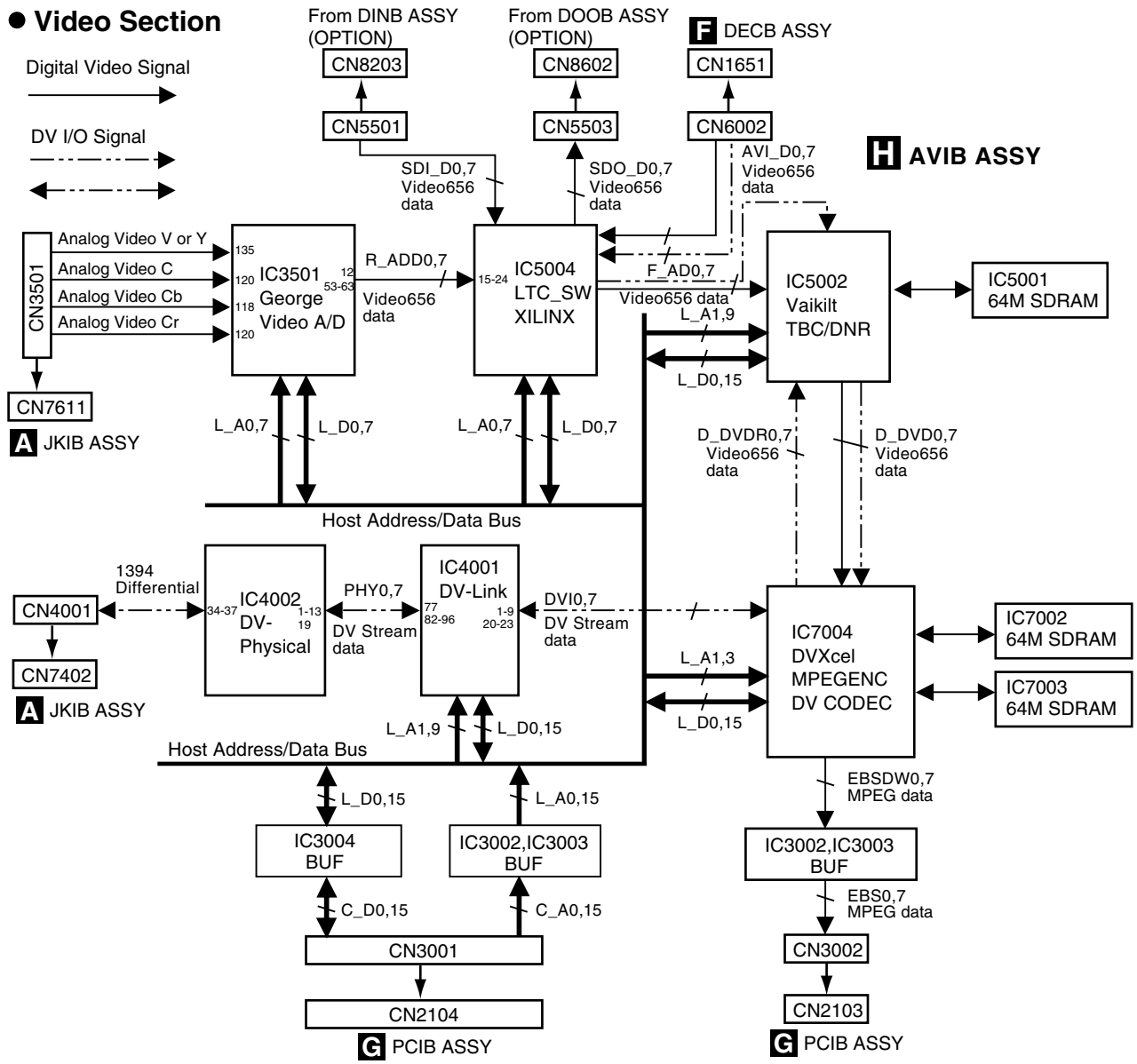

● Clock Oscillation Section

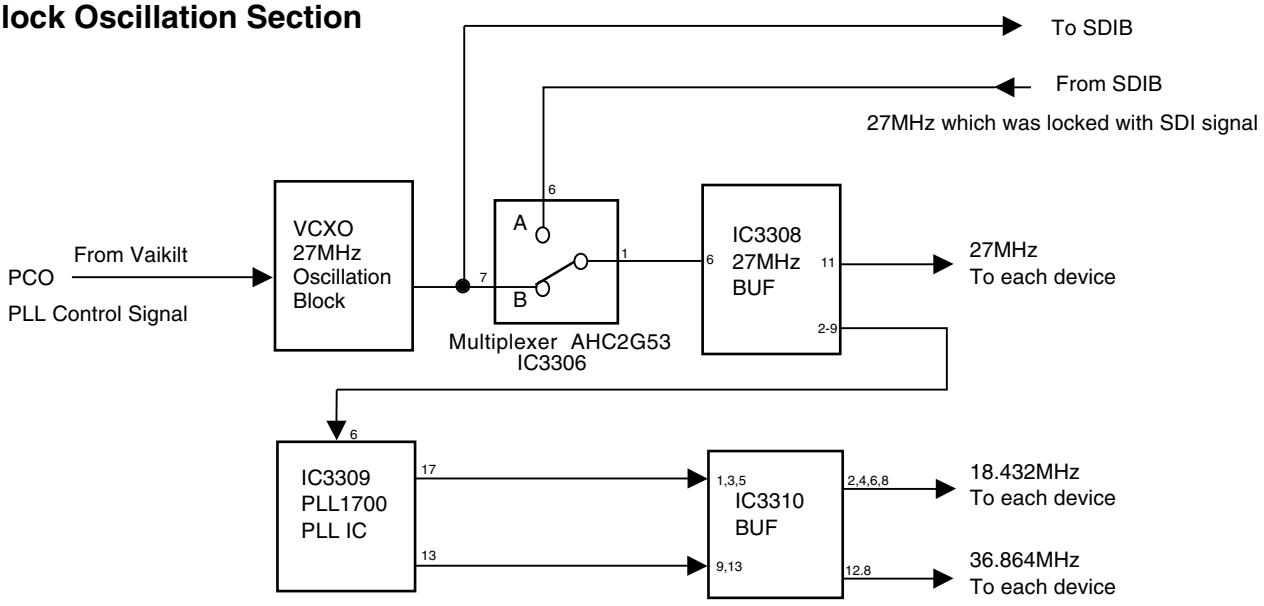

● Audio Section

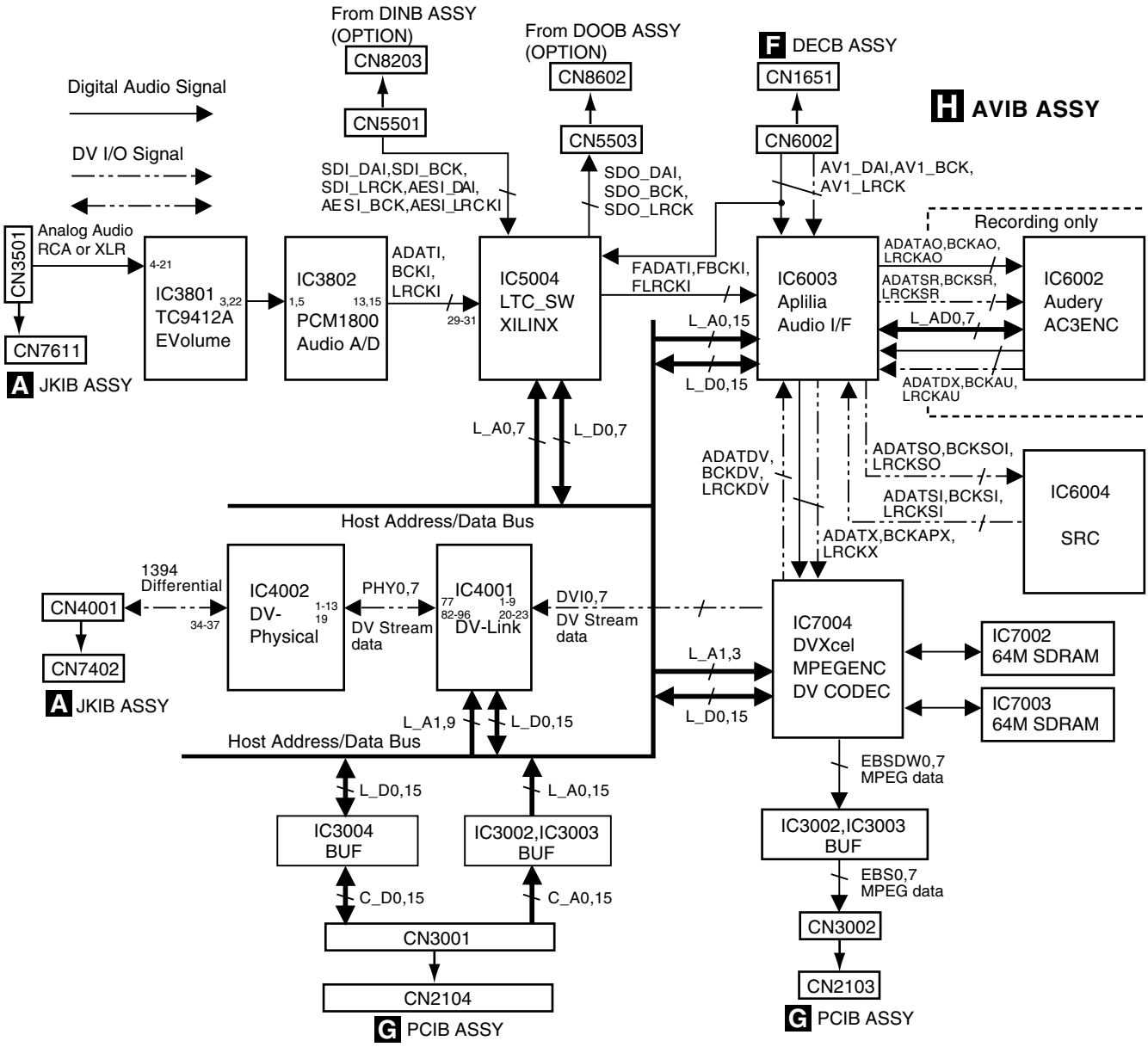

3.1.6 PWRB, FLKB, KEYB, DRV1B, DRV2B and USBB ASSYS

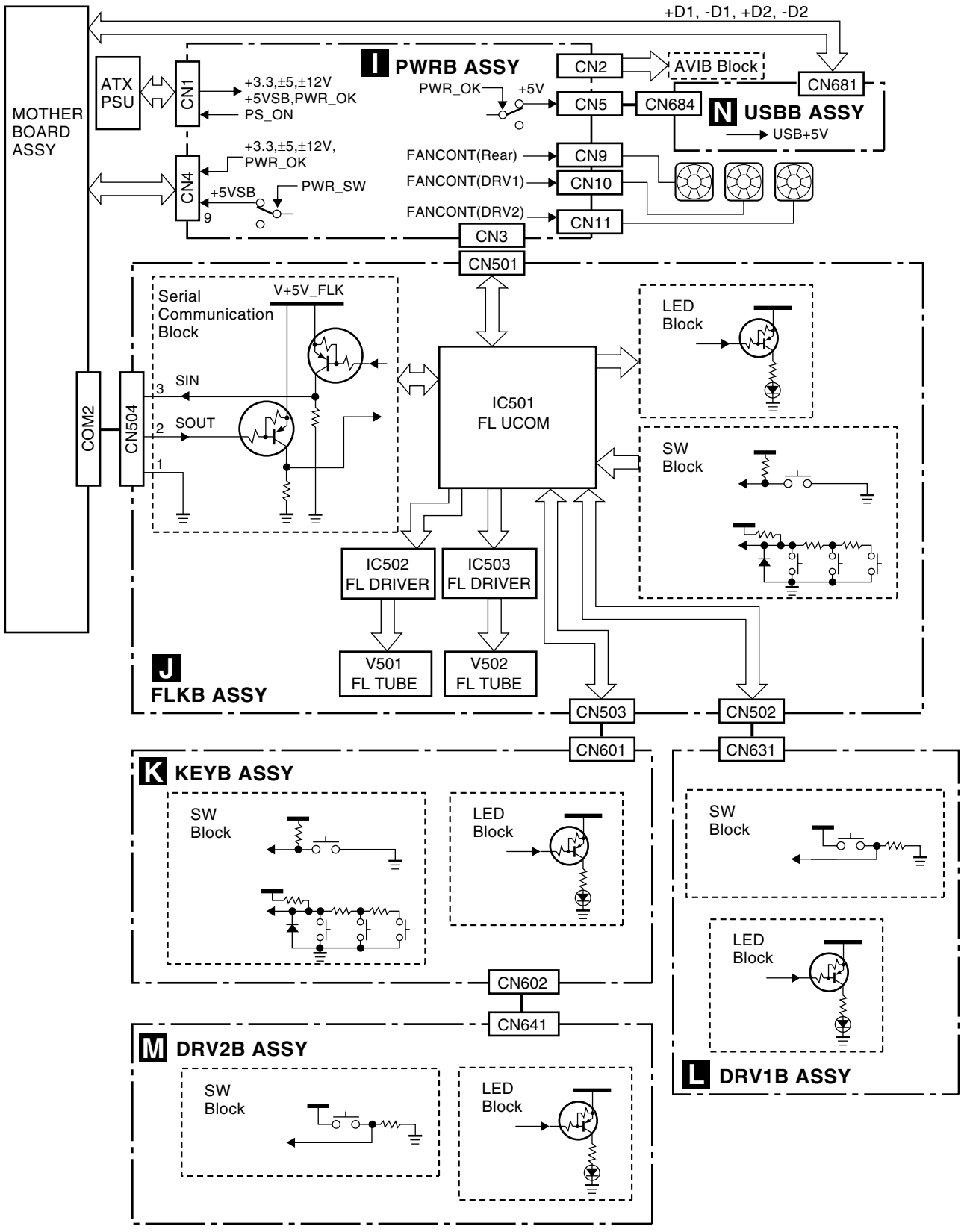

3.1.7 PWRB ASSY

PWRB(POLY) ASSY

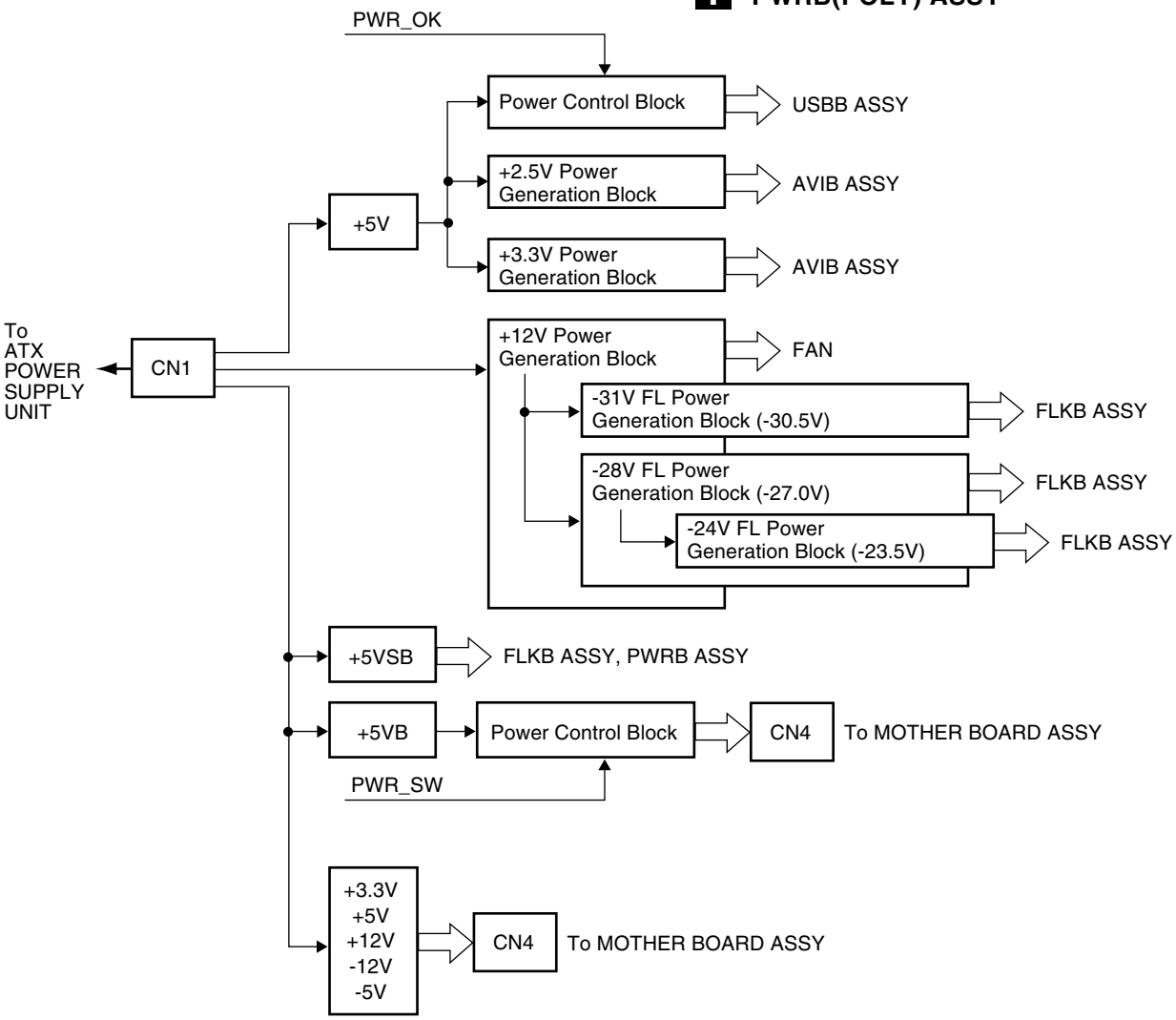

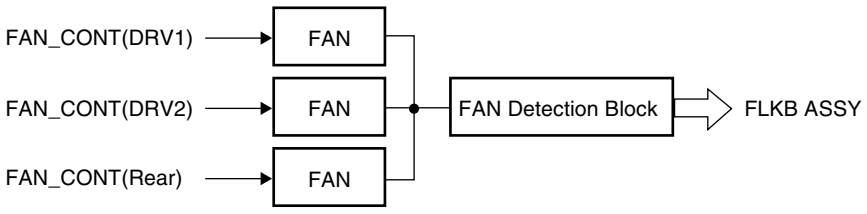

3.1.8 WAVEFORMS

Note : The encircled numbers denote measuring point in the schematic diagram.

A JKIB ASSY

Measurement condition :
Video input (playback) signal : 75/0/75/0 color-bar (NTSC)
Audio input (playback) signal : 1kHz 0dB

1 IC7409 - pin 7 (CVBS IN)
V: 1V/div. H: 10µsec/div.
A 1/3

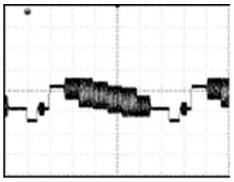

7 IC7403 - pin 7 (S-C IN)
V: 1V/div. H: 10µsec/div.
A 1/3

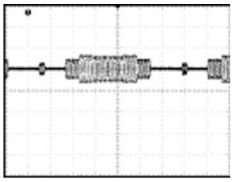

13 IC7621 - pin 1 (XLR_ch1 IN)
V: 2V/div. H: 1msec/div.
A 2/3

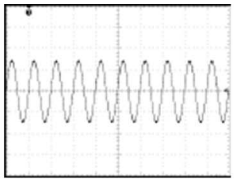

19 IC7803 - pin 23 (Cb/B OUT)
V: 1V/div. H: 10µsec/div.
A 3/3

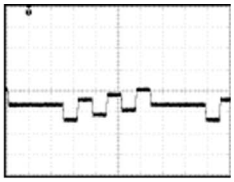

2 IC7409 - pin 7 (S-Y IN)
V: 1V/div. H: 10µsec/div.
A 1/3

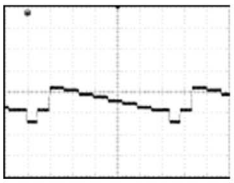

8 IC7413 - pin 1 (Y (SMPTE) IN)
V: 1V/div. H: 10µsec/div.
A 1/3

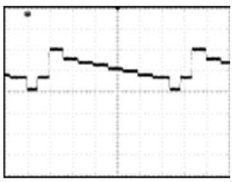

14 IC7401 - pin 3 (C SYNC)
V: 1V/div. H: 10µsec/div.
A 1/3

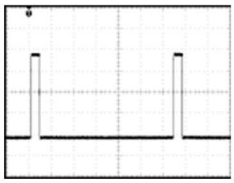

20 IC7803 - pin 21 (Cr/R OUT)
V: 1V/div. H: 10µsec/div.
A 3/3

3 IC7413 - pin 7 (Y (Beta) IN)
V: 1V/div. H: 10µsec/div.
A 1/3

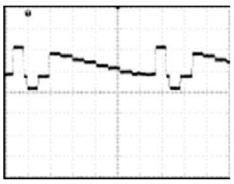

9 IC7419 - pin 1 (Cb (SMPTE) IN)
V: 1V/div. H: 10µsec/div.
A 1/3

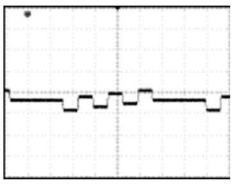

15 IC7402 - pin 5 (SYNC PULS)
V: 1V/div. H: 10µsec/div.
A 1/3

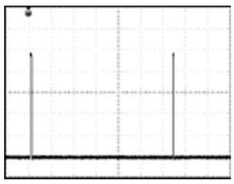

21 IC7803 - pin 33 (CV_THRU OUT)
V: 1V/div. H: 10µsec/div.
A 3/3

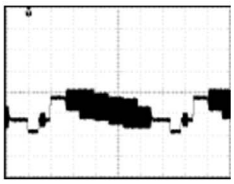

4 IC7419 - pin 7 (Cb (Beta) IN)
V: 1V/div. H: 10µsec/div.
A 1/3

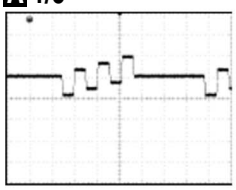

10 IC7420 - pin 1 (Cr (SMPTE) IN)
V: 1V/div. H: 10µsec/div.
A 1/3

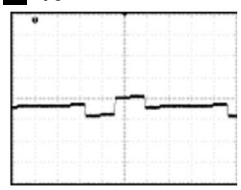

16 IC7803 - pin 33 (CVBS OUT)
V: 1V/div. H: 10µsec/div.
A 3/3

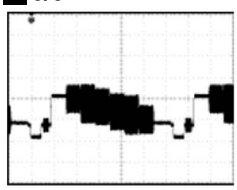

22 IC7803 - pin 31 (S-C OUT)
V: 1V/div. H: 10µsec/div.
A 3/3

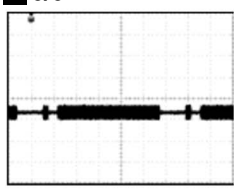

5 IC7420 - pin 7 (Cr (Beta) IN)
V: 1V/div. H: 10µsec/div.
A 1/3

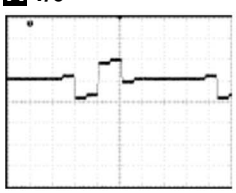

11 IC7613 - pin 1 (RCA_L IN)
V: 2V/div. H: 1msec/div.
A 2/3

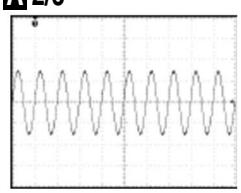

17 IC7803 - pin 28 (S-Y OUT)
V: 1V/div. H: 10µsec/div.
A 3/3

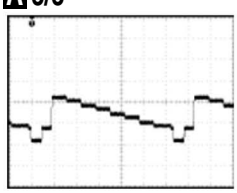

23 IC7803 - pin 25 (Prog Y/G OUT)
V: 1V/div. H: 10µsec/div.
A 3/3

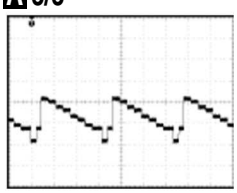

6 IC7404 - pin 7 (CV_THRU IN)
V: 1V/div. H: 10µsec/div.
A 1/3

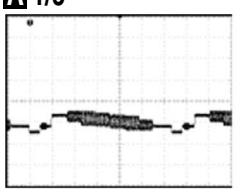

12 IC7613 - pin 7 (L_THRU IN)
V: 2V/div. H: 1msec/div.
A 2/3

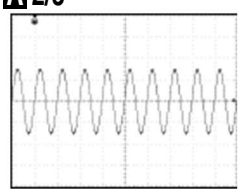

18 IC7803 - pin 25 (Y/G OUT)
V: 1V/div. H: 10µsec/div.
A 3/3

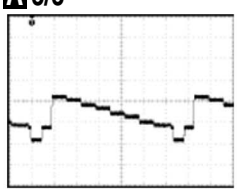

24 IC7803 - pin 23 (Prog Cb/B OUT)
V: 1V/div. H: 10µsec/div.
A 3/3

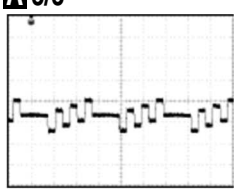

A JKIB ASSY

Measurement condition :
Video input (Recording/Playback) signal: 100/0/75/0 EBU color-bar (PAL)

25 IC7803 - pin 21 (Prog Cr/R OUT)
V: 1V/div. H: 10µsec/div.
A 3/3

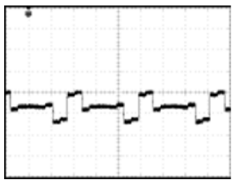

26 IC7703 - pin 7 (RCA_L OUT)
V: 2V/div. H: 1msec/div.
A 2/3

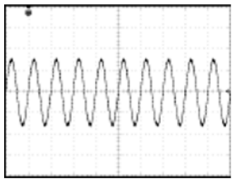

27 IC7703 - pin 7 (L_THRU OUT)
V: 2V/div. H: 1msec/div.
A 2/3

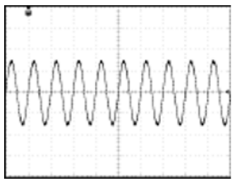

28 IC7709 - pin 1 (XLR_1ch_ H OUT)
V: 2V/div. H: 1msec/div.
A 2/3

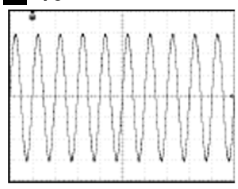

29 IC7709 - pin 7 (XLR_1ch_C OUT)
V: 2V/div. H: 1msec/div.
A 2/3

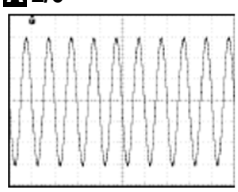

30 CN7802 - pin 29 (SPDIF OUT)
V: 0.5V/div. H: 400nsec/div.
A 3/3

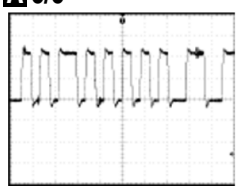

31 IC7409 - pin 7 (CVBS IN)
V: 1V/div. H: 10µsec/div.
A 1/3

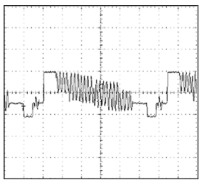

32 IC7409 - pin 7 (S_Y IN)
V: 1V/div. H: 10µsec/div.
A 1/3

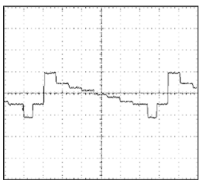

33 IC7404 - pin 7 (CV_THRU IN)
V: 1V/div. H: 10µsec/div.
A 1/3

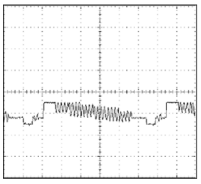

34 IC7403 - pin 7 (S_C IN)
V: 1V/div. H: 10µsec/div.
A 1/3

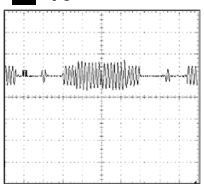

35 IC7413 - pin 1 (Y IN)
V: 1V/div. H: 10µsec/div.
A 1/3

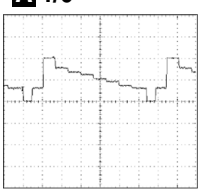

36 IC7419 - pin 1 (Cb IN)
V: 1V/div. H: 10µsec/div.
A 1/3

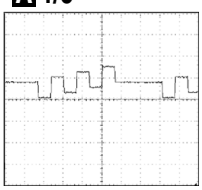

37 IC7420 - pin 1 (Cr IN)
V: 1V/div. H: 10µsec/div.
A 1/3

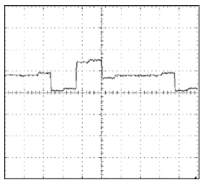

38 IC7401 - pin 3 (C SYNC)
V: 1V/div. H: 10µsec/div.
A 1/3

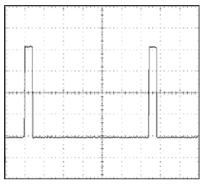

39 IC7402 - pin 5 (SYNC PULS)
V: 1V/div. H: 10µsec/div.
A 1/3

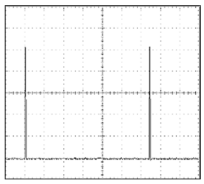

40 IC7803 - pin 33 (CVBS OUT)
V: 1V/div. H: 10µsec/div.
A 3/3

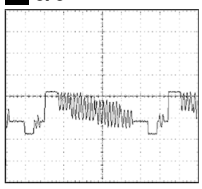

41 IC7803 - pin 28 (S_Y OUT)
V: 1V/div. H: 10µsec/div.
A 3/3

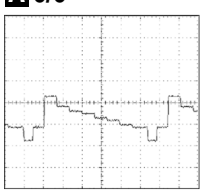

42 IC7803 - pin 25 (Y/G OUT)
V: 1V/div. H: 10µsec/div.
A 3/3

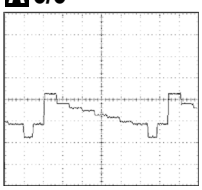

43 IC7803 - pin 23 (Cb/B OUT)
V: 1V/div. H: 10µsec/div.
A 3/3

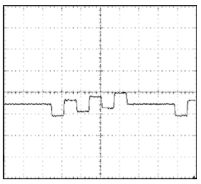

44 IC7803 - pin 21 (Cr/R OUT)
V: 1V/div. H: 10µsec/div.
A 3/3

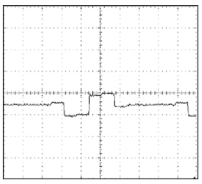

45 IC7803 - pin 33 (CV_THRU OUT)
V: 1V/div. H: 10µsec/div.
A 3/3

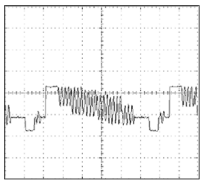

46 IC7803 - pin 31 (S_C OUT)
V: 1V/div. H: 10µsec/div.
A 3/3

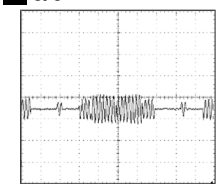

B JKDB ASSY

① **JA7941 - pin 5 (BlackBurst IN)**
V: 1V/div. H: 10µsec/div.

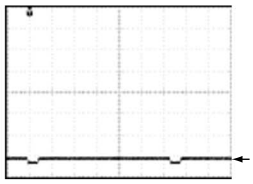

② **CN7941 - pin 1 (SIG)**
V: 1V/div. H: 10µsec/div.

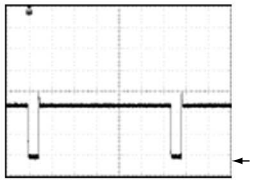

④ **IC7921 - pin 11 (LTC)**
V: 1V/div. H: 400µsec/div.

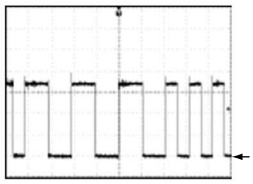

D HPVB ASSY

① **JA661 - pin 3 (HP_L OUT)**
V: 2V/div. H: 1msec/div.

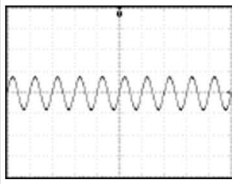

F DECB ASSY

Measurement condition :
Video input (playback) signal : 75/0/75/0 color-bar (NTSC)
Audio input (playback) signal : 1kHz 0dB

① **CN1811 - pin 8 (CVBS)**
V: 0.5V/div. H: 10µsec/div.

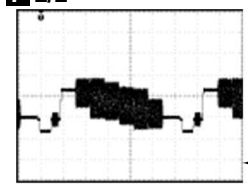

⑦ **CN1811 - pin 10 (S-C)**
V: 0.5V/div. H: 10µsec/div.

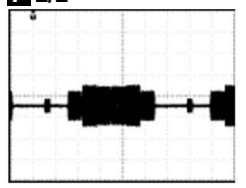

② **CN1811 - pin 12 (S-Y)**
V: 0.5V/div. H: 10µsec/div.

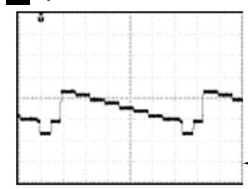

⑧ **CN1811 - pin 16 (Y prog)**
V: 0.5V/div. H: 10µsec/div.

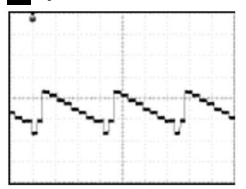

③ **CN1811 - pin 16 (Y)**
V: 0.5V/div. H: 10µsec/div.

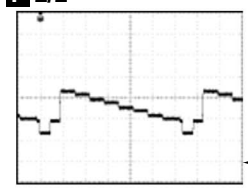

⑨ **CN1811 - pin 18 (Cb prog)**
V: 0.5V/div. H: 10µsec/div.

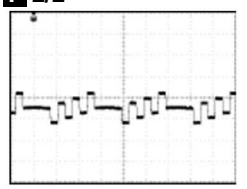

④ **CN1811 - pin 18 (Cb)**
V: 0.5V/div. H: 10µsec/div.

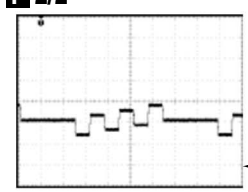

⑩ **CN1811 - pin 20 (Cr prog)**
V: 0.5V/div. H: 10µsec/div.

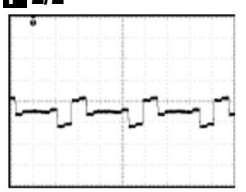

⑤ **CN1811 - pin 20 (Cr)**
V: 0.5V/div. H: 10µsec/div.

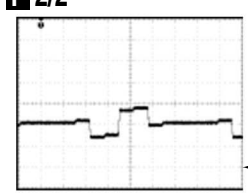

⑥ **CN1611 - pin 23 (Lch)**
V: 2V/div. H: 1msec/div.

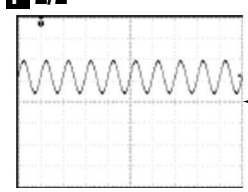

F DECB ASSY

Measurement condition :
Video input (playback) signal :
75/0/75/0 EBU color-bar (PAL)

(11) CN1811 - pin 8 (CVBS)
V: 0.5V/div. H: 10µsec/div.

F 2/2

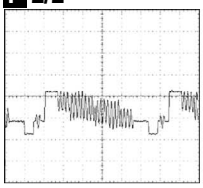

(12) CN1811 - pin 12 (S-Y)
V: 0.5V/div. H: 10µsec/div.

F 2/2

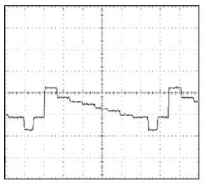

(13) CN1811 - pin 16 (Y)
V: 0.5V/div. H: 10µsec/div.

F 2/2

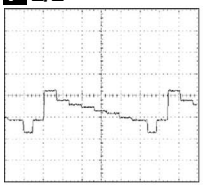

(14) CN1811 - pin 18 (Cb)
V: 0.5V/div. H: 10µsec/div.

F 2/2

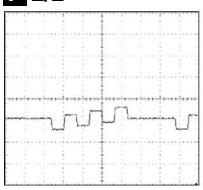

(15) CN1811 - pin 20 (Cr)
V: 0.5V/div. H: 10µsec/div.

F 2/2

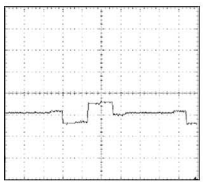

(16) CN1611 - pin 10 (S-C)
V: 0.5V/div. H: 10µsec/div.

F 2/2

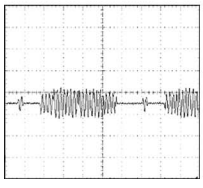

H AVIB ASSY

Measurement condition :
Video input (playback) signal : 75/0/75/0 color-bar (NTSC)
Audio input (playback) signal : 1kHz 0dB

(1) CN3501 - pin 7 (CVBS)
V: 1V/div. H: 10µsec/div.

H 2/6

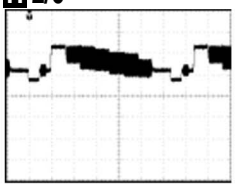

(7) CN3502 - pin 2 (Lch)
V: 2V/div. H: 1msec/div.

H 2/6

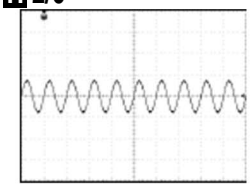

(2) CN3501 - pin 7 (S-Y)
V: 1V/div. H: 10µsec/div.

H 2/6

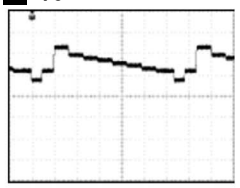

(3) CN3501 - pin 9 (S-C)
V: 1V/div. H: 10µsec/div.

H 2/6

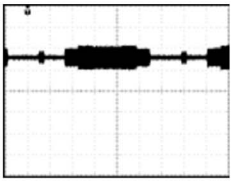

(4) CN3501 - pin 7 (Y beta/SMPTE)
V: 1V/div. H: 10µsec/div.

H 2/6

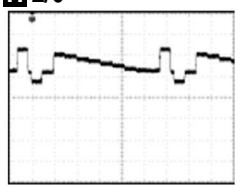

(5) CN3501 - pin 11 (Cb Beta/SMPTE)
V: 1V/div. H: 10µsec/div.

H 2/6

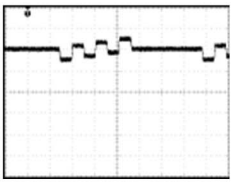

(6) CN3501 - pin 13 (Cr Beta/SMPTE)
V: 1V/div. H: 10µsec/div.

H 2/6

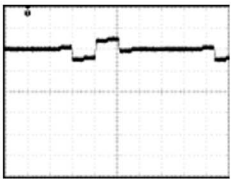

H AVIB ASSY

Measurement condition :
Video input (Recording) signal
100/0/75/0 EBU color-bar (PAL)

(8) CN3501 - pin 7 (CVBS)
V: 1V/div. H: 10µsec/div.

H 2/6

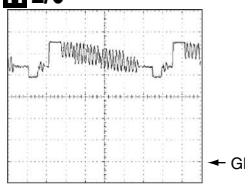

(9) CN3501 - pin 7 (S-Y)
V: 1V/div. H: 10µsec/div.

H 2/6

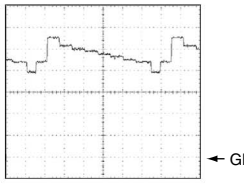

(10) CN3501 - pin 9 (S-C)
V: 1V/div. H: 10µsec/div.

H 2/6

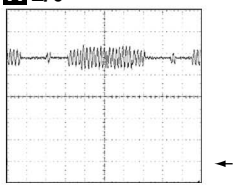

(11) CN3501 - pin 7 (Y)
V: 1V/div. H: 10µsec/div.

H 2/6

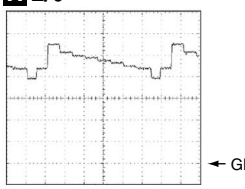

(12) CN3501 - pin 11 (Cb)
V: 1V/div. H: 10µsec/div.

H 2/6

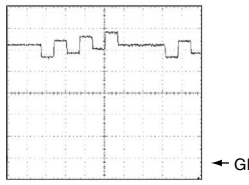

(13) CN3501 - pin 13 (Cr)
V: 1V/div. H: 10µsec/div.

H 2/6

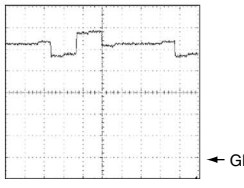

A

B

C

D

E

F

3.2 OVERALL WIRING DIAGRAM

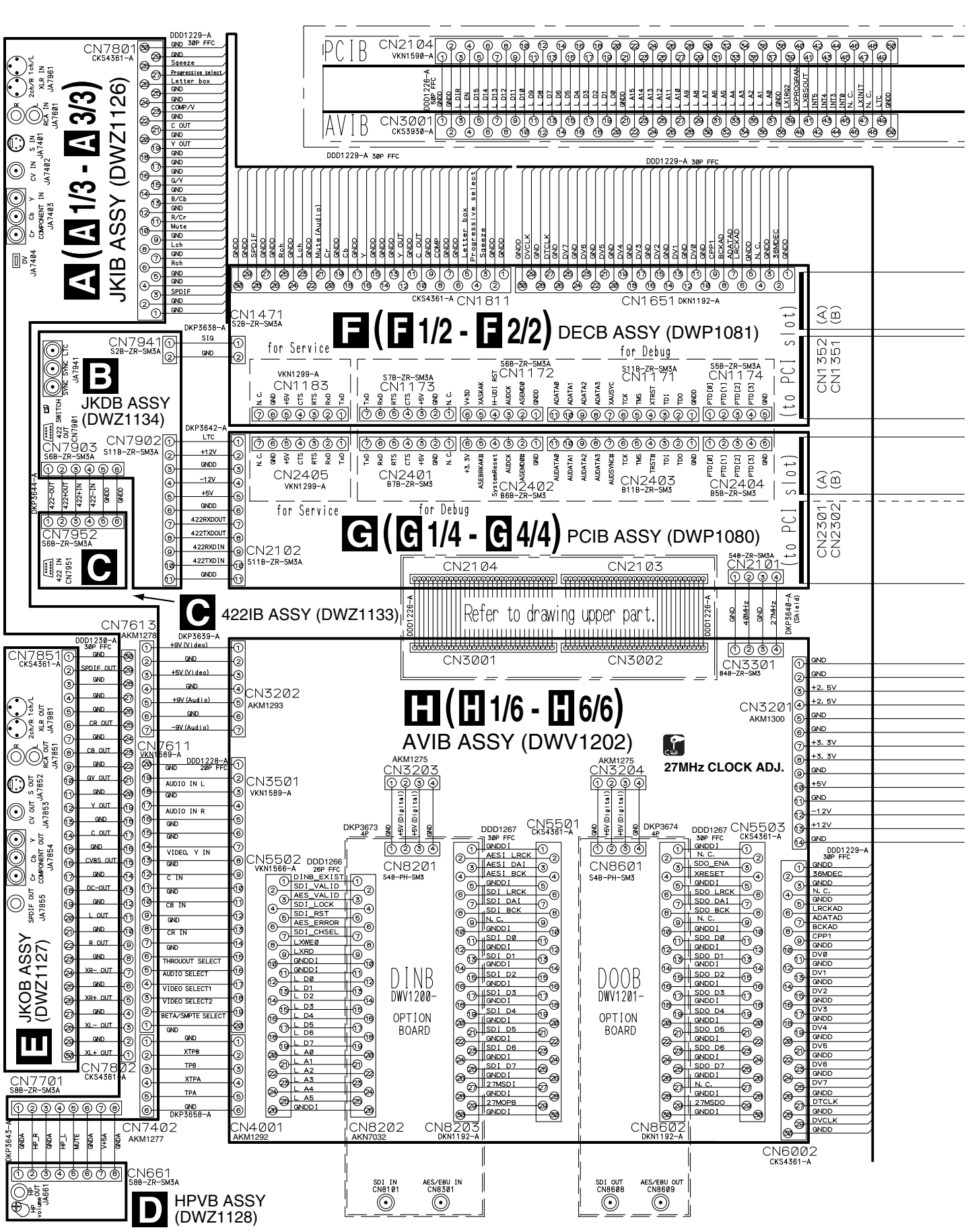

Note : When ordering service parts, be sure to refer to "EXPLODED VIEWS and PARTS LIST" or "PCB PARTS LIST".

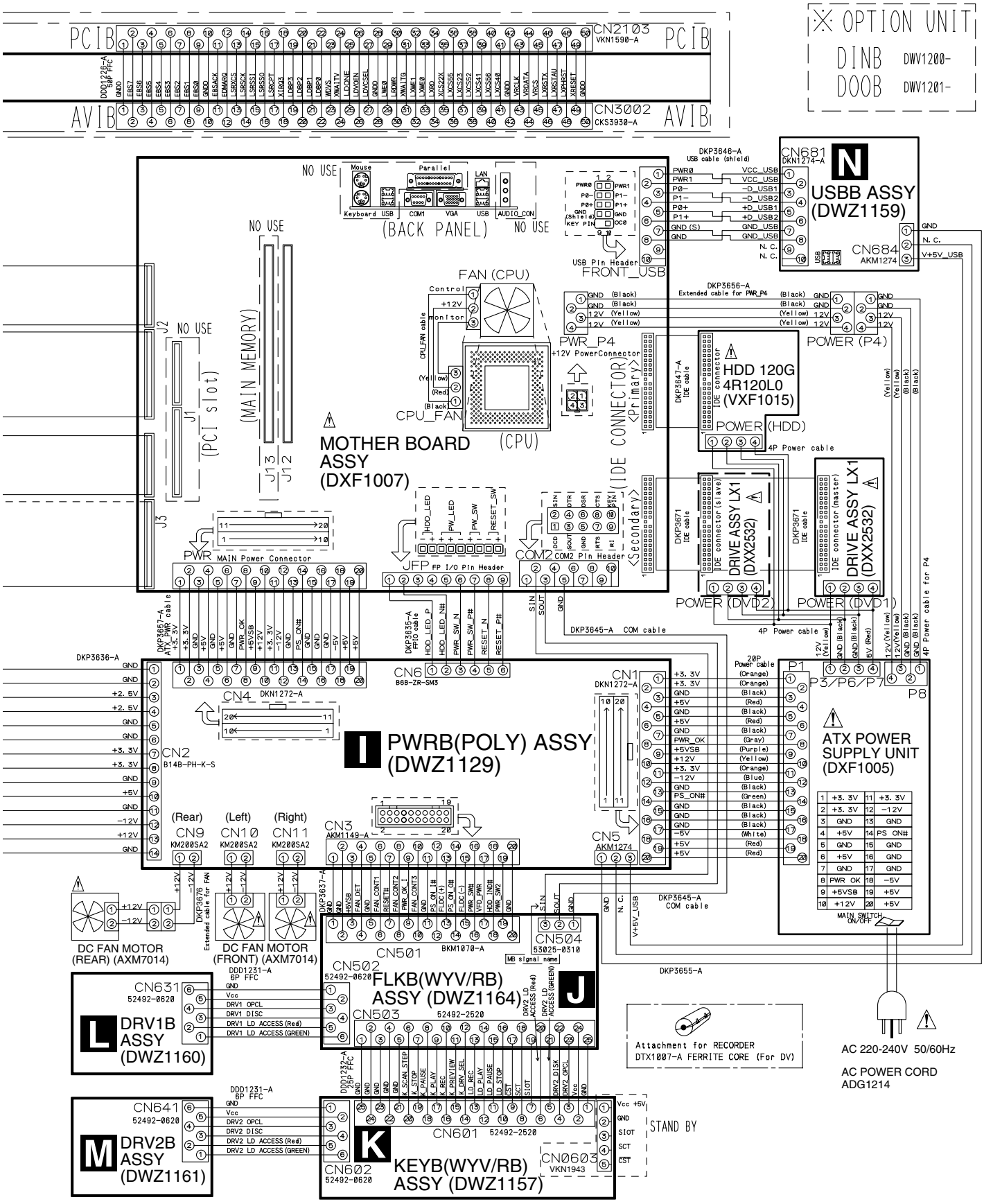

3.3 JKIB ASSY (1/3)

A 1/3 JKIB ASSY (DWZ1126)

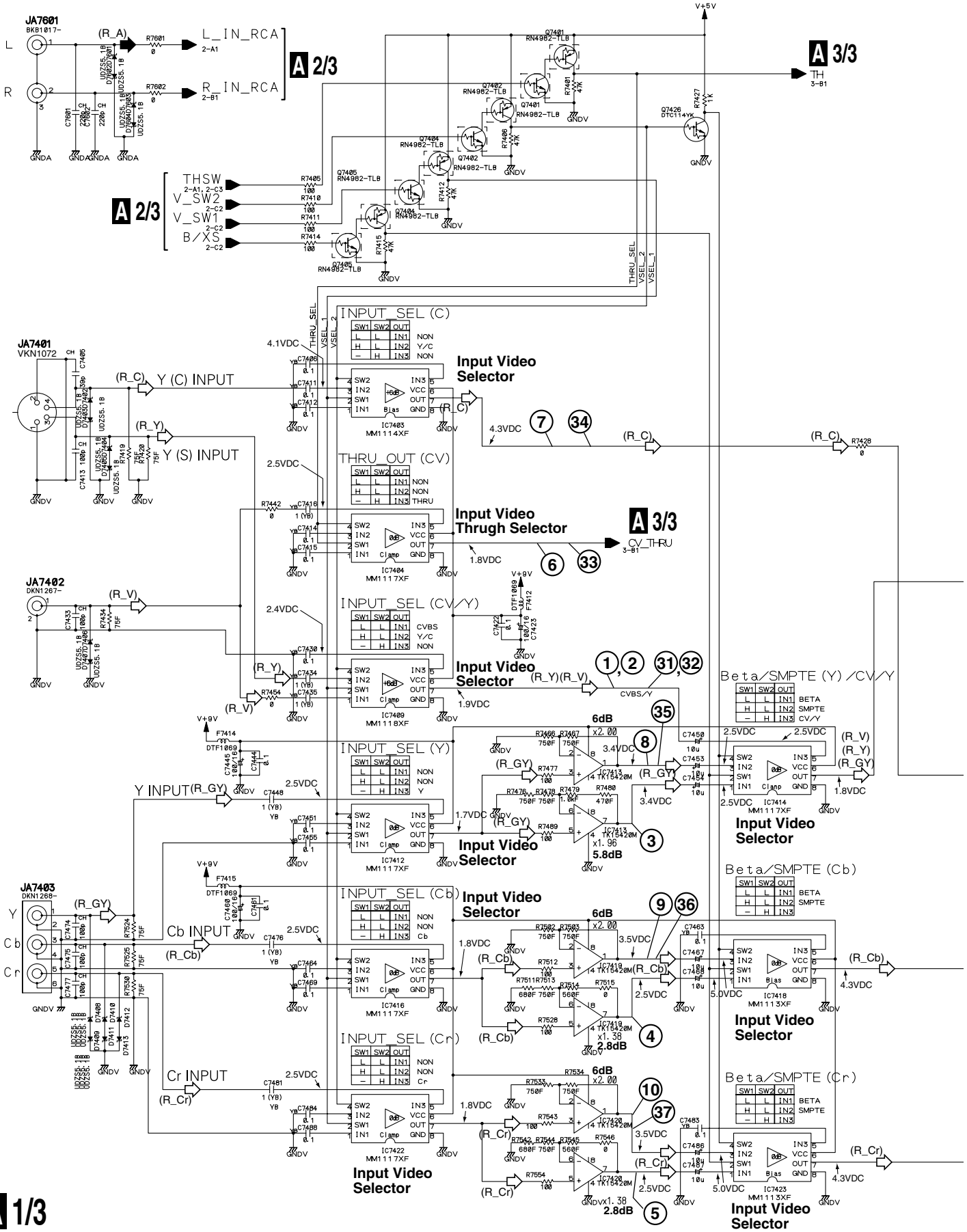

(R_V): Recording Signal Route (Composite Video)
(R_Y): Recording Signal Route (S-Video_Y)
(R_C): Recording Signal Route (S-Video_C)
(R_GY): Recording Signal Route (Component_Y)
(R_Cb): Recording Signal Route (Component_Cb)
(R_Cr): Recording Signal Route (Component_Cr)

(R_A): Recording Signal Route (Analog Audio L ch)
(R_DAV): Recording Signal Route (Digital Audio/Video)
(P_DAV): Playback Signal Route (Digital Audio/Video)

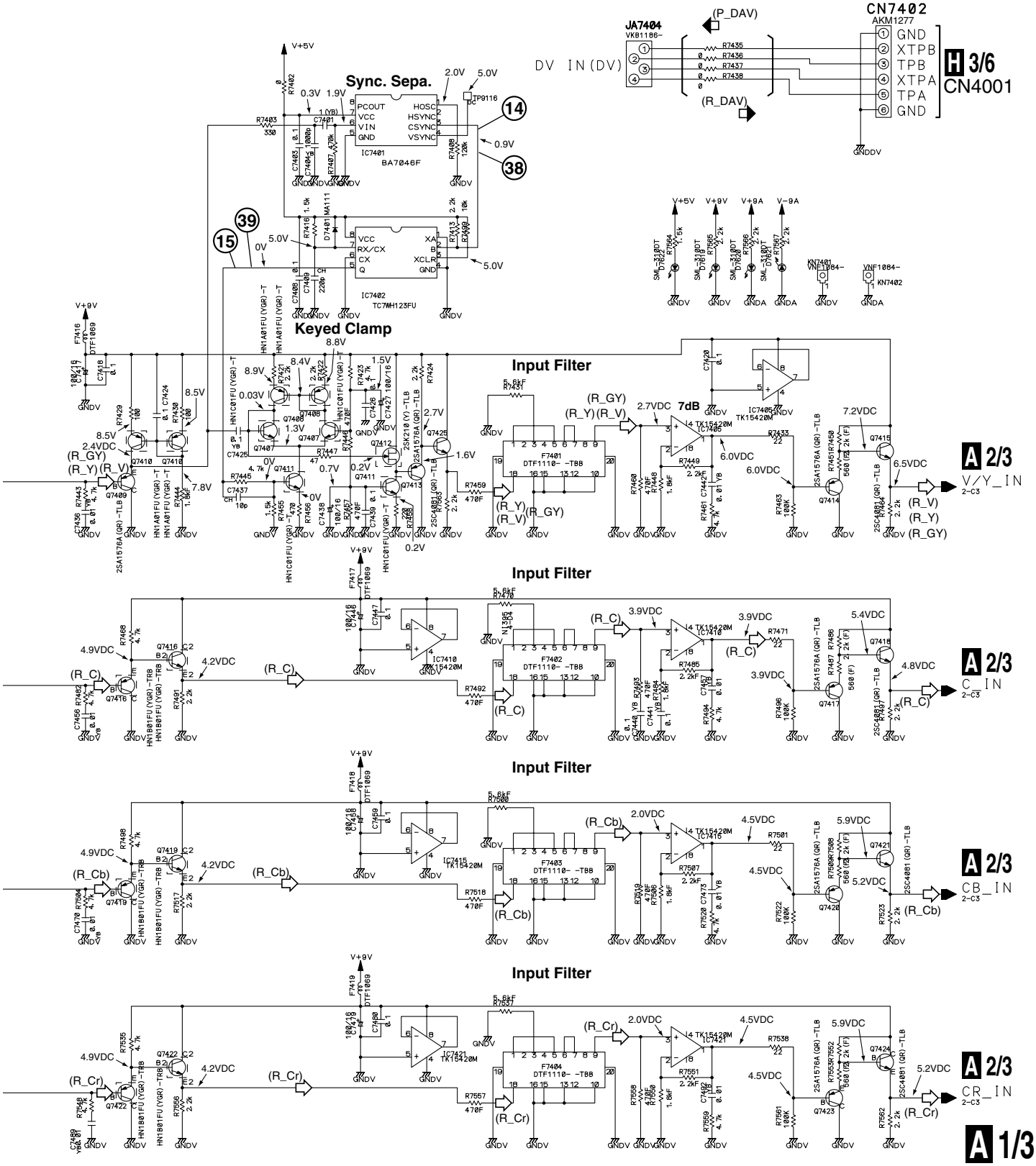

3.4 JKIB ASSY (2/3)

A 2/3 JKIB ASSY (DWZ1126)

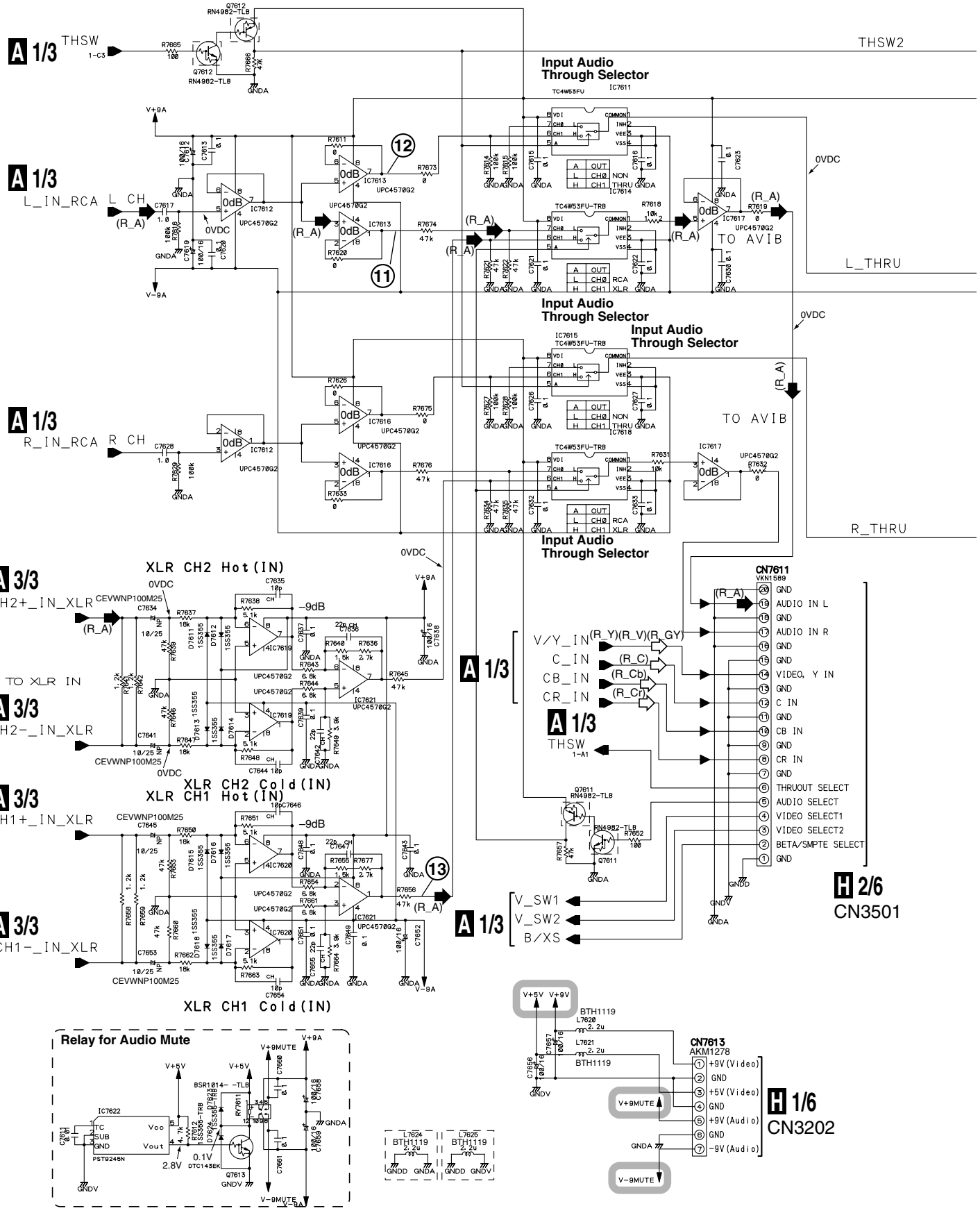

A 2/3

(R_V): Recording Signal Route (Composite Video)
(R_Y): Recording Signal Route (S-Video_Y)
(R_C): Recording Signal Route (S-Video_C)
(R_GY): Recording Signal Route (Component_Y)
(R_Cb): Recording Signal Route (Component_Cb)
(R_Cr): Recording Signal Route (Component_Cr)
(R_A): Recording Signal Route (Analog Audio L ch)
(P_A): Playback Signal Route (Analog Audio L ch)

A 3/3 MUTE THSW2 1-A4, 1-D4
MUTE 1-A4, 1-D4
A 3/3
A 3/3 L_OUT
A 3/3 R_OUT
L_THRU
R_THRU
CEVWNP470M10 R7725 33k (D)
CEVWNP470M10 R7707 33k (D)
Input Audio Through Selector
Input Audio Through Selector
TC4W53FU-TRB
NJM4556AM
NJM5532MD
NJM78M05DL1A-TL8
CN7701 S8B-ZR-SM3A
CN661
GNDA GNDV GND
0VDC
V+9A V-9A V+9MUTE
(P_A)
A 3/3 L_OUT_RCA
A 3/3 R_OUT_RCA
A 3/3 CH2+_OUT_XLR
A 3/3 CH2-_OUT_XLR
A 3/3 CH1+_OUT_XLR
A 3/3 CH1-_OUT_XLR
TO XLR OUT
A 3/3 FROM_DECB MUTE 1-A4, 1-A4
: The power supply is shown with the marked box.
A 2/3

3.5 JKIB ASSY (3/3)

A 3/3 JKIB ASSY (DWZ1126)

(P_V): Playback Signal Route (Composite Video)
(P_Y): Playback Signal Route (S-Video_Y)
(P_C): Playback Signal Route (S-Video_C)
(P_GY): Recording Signal Route (Component_Y)
(P_Cb): Playback Signal Route (Component_Cb)
(P_Cr): Playback Signal Route (Component_Cr)
(R_A): Recording Signal Route (Analog Audio L ch)
(P_A): Playback Signal Route (Analog Audio L ch)
(P_D): Playback Signal Route (Digital Audio)

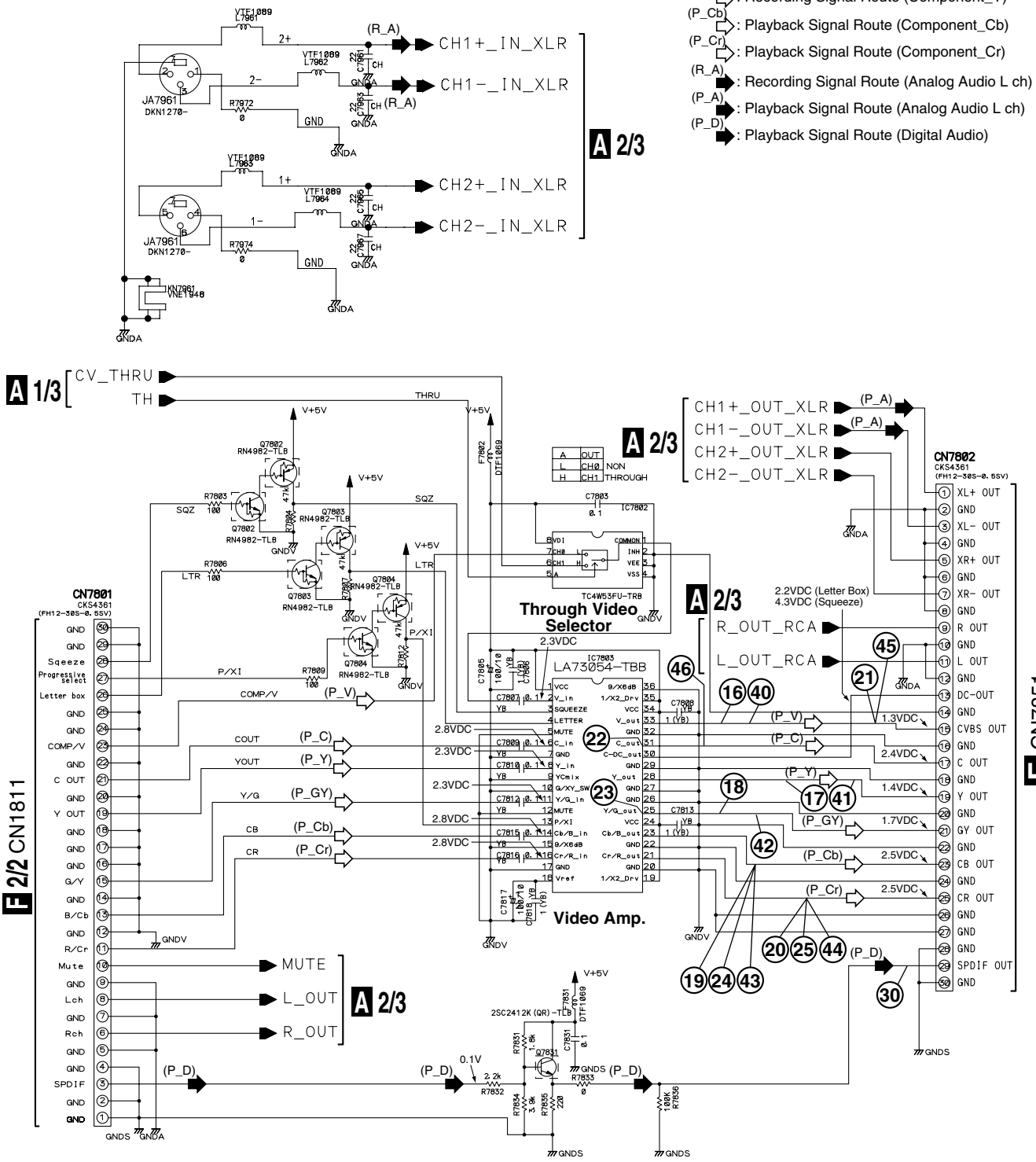

A

B

C

D

E

F

3.6 JKDB and 422IB ASSYS

B JKDB ASSY (DWZ1134)

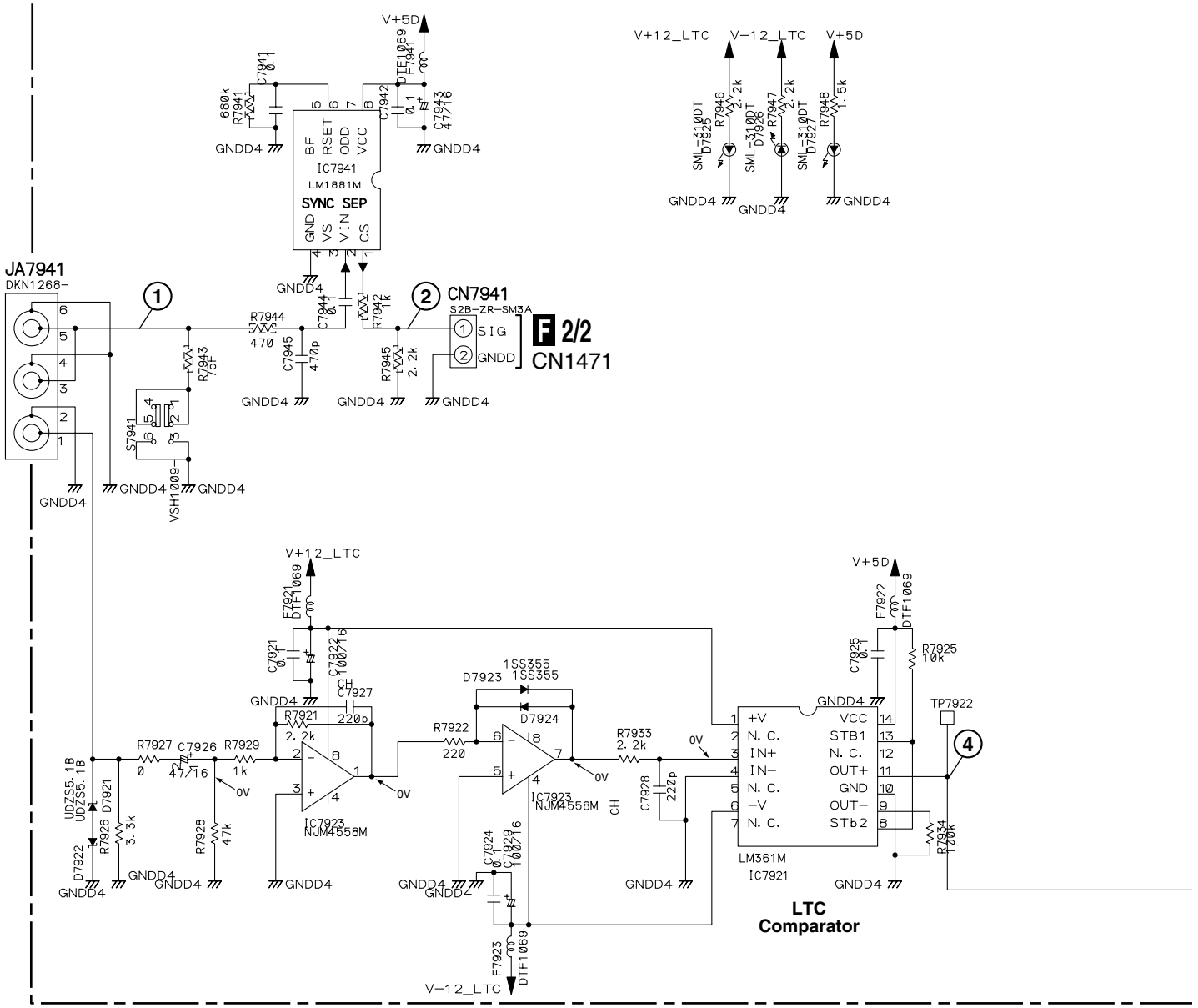

C 422IB ASSY (DWZ1133)

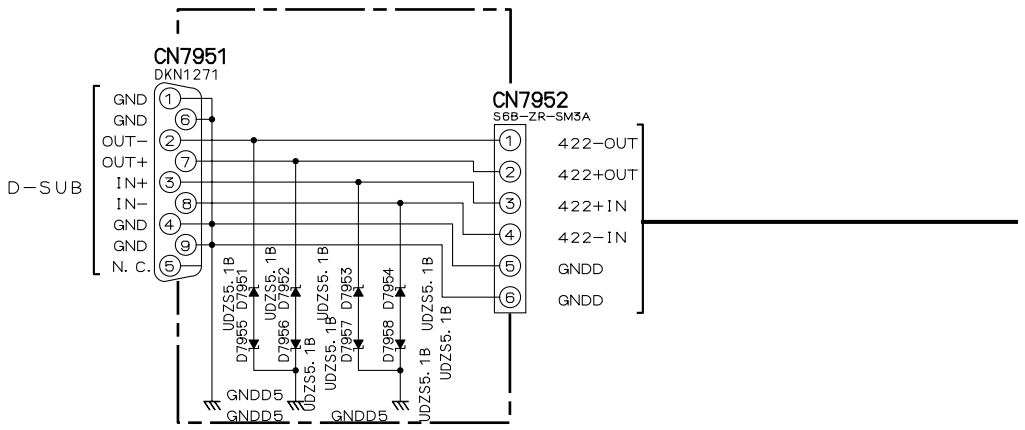

B C

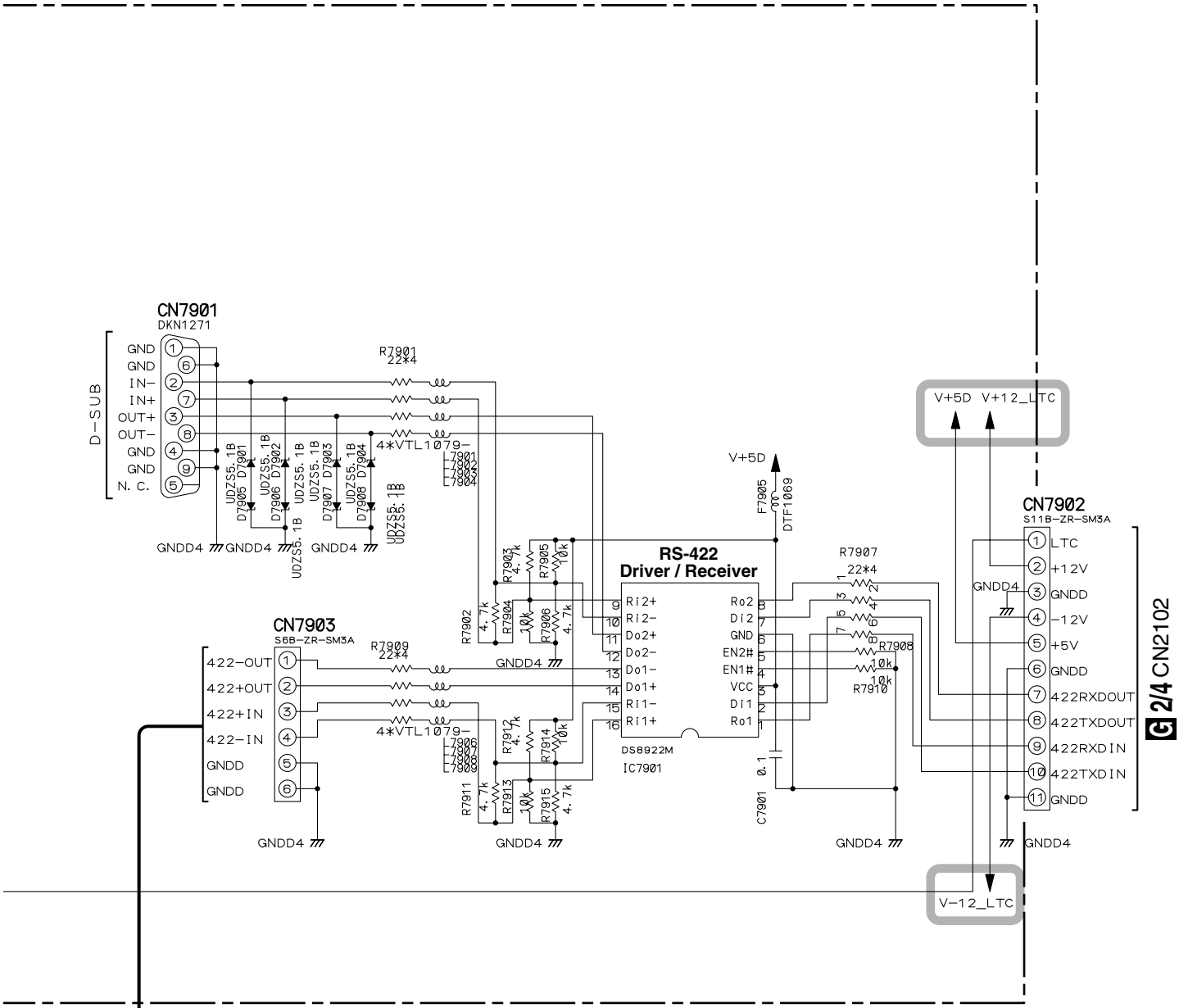

: The power supply is shown with the marked box.

3.7 HPVB and JKOB ASSYS

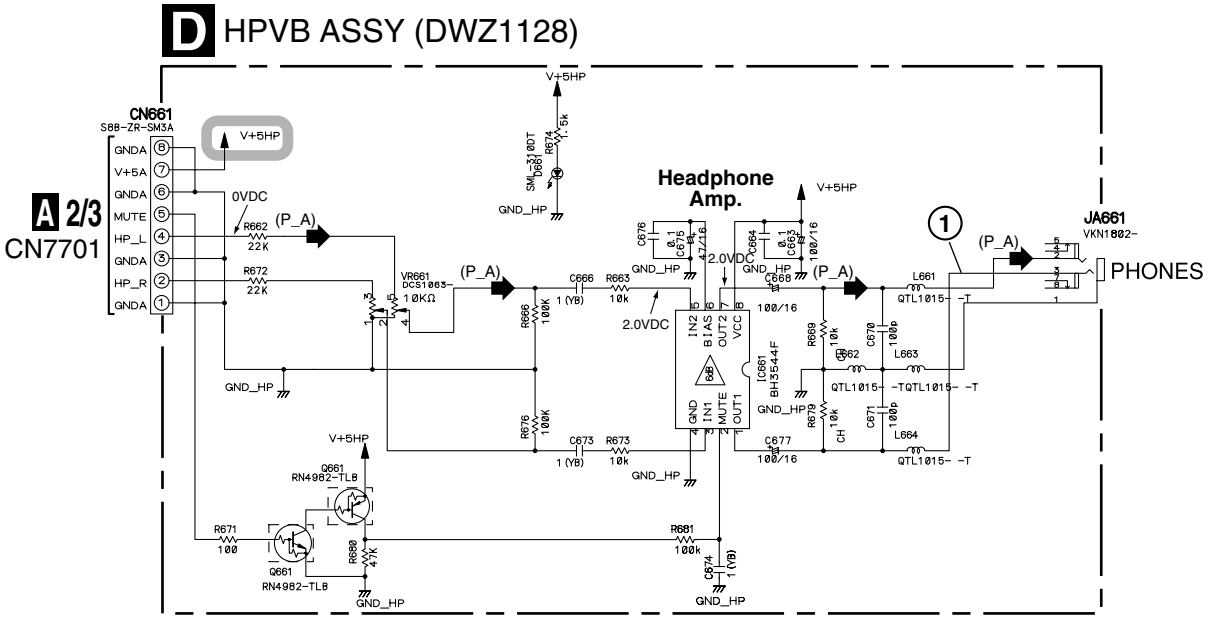

: The power supply is shown with the marked box.

(P_V) : Playback Signal Route (Composite Video)
(P_Y) : Playback Signal Route (S-Video_Y)
(P_C) : Playback Signal Route (S-Video_C)
(P_GY) : Playback Signal Route (Component_Y)
(P_Cb) : Playback Signal Route (Component_Cb)
(P_Cr) : Playback Signal Route (Component_Cr)
(P_A) : Playback Signal Route (Analog Audio L ch)
(P_D) : Playback Signal Route (Digital Audio)

E JKOB ASSY (DWZ1127)

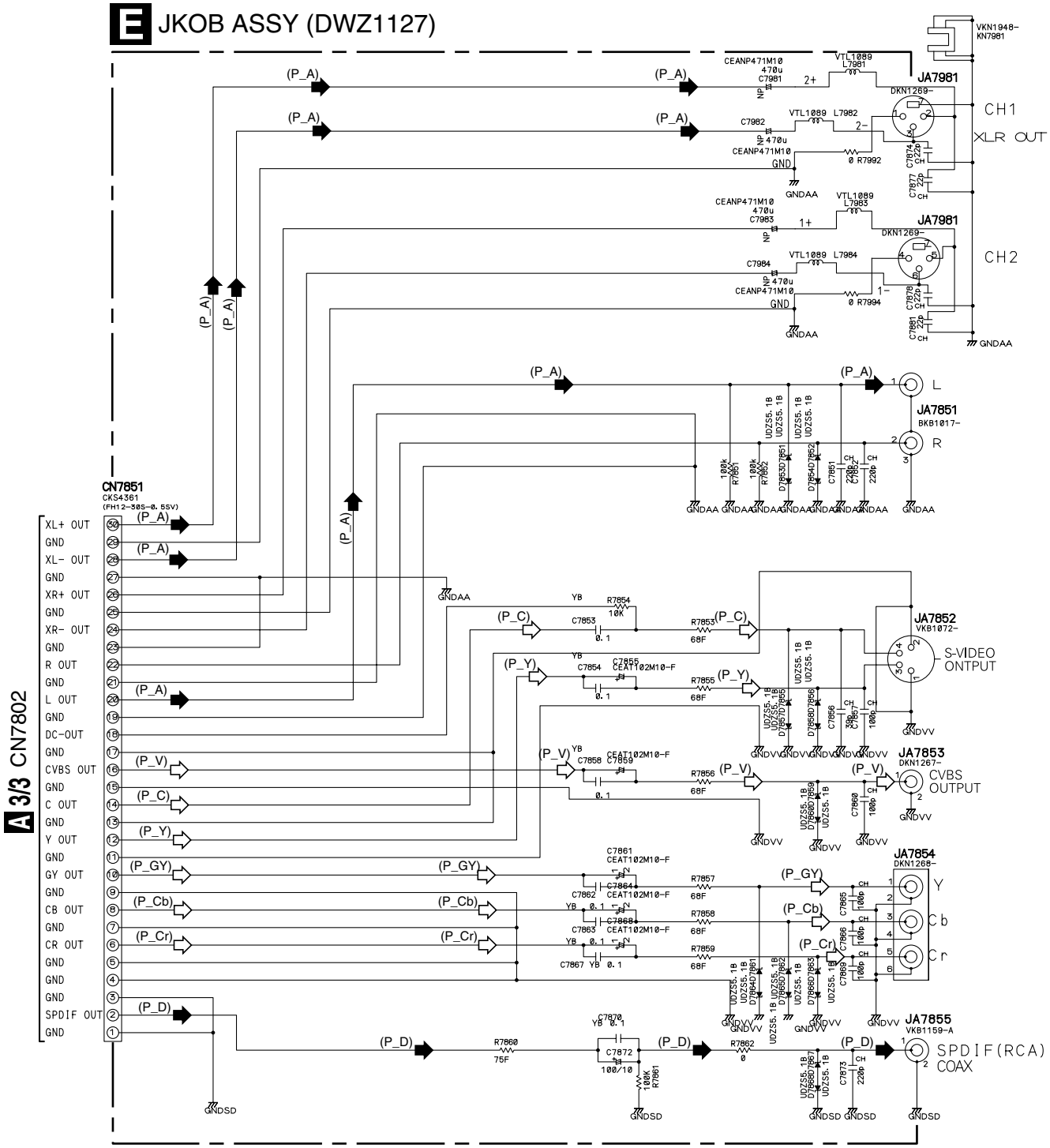

3.8 DECB ASSY (1/2)

F 1/2 DECB ASSY (DWP1081)

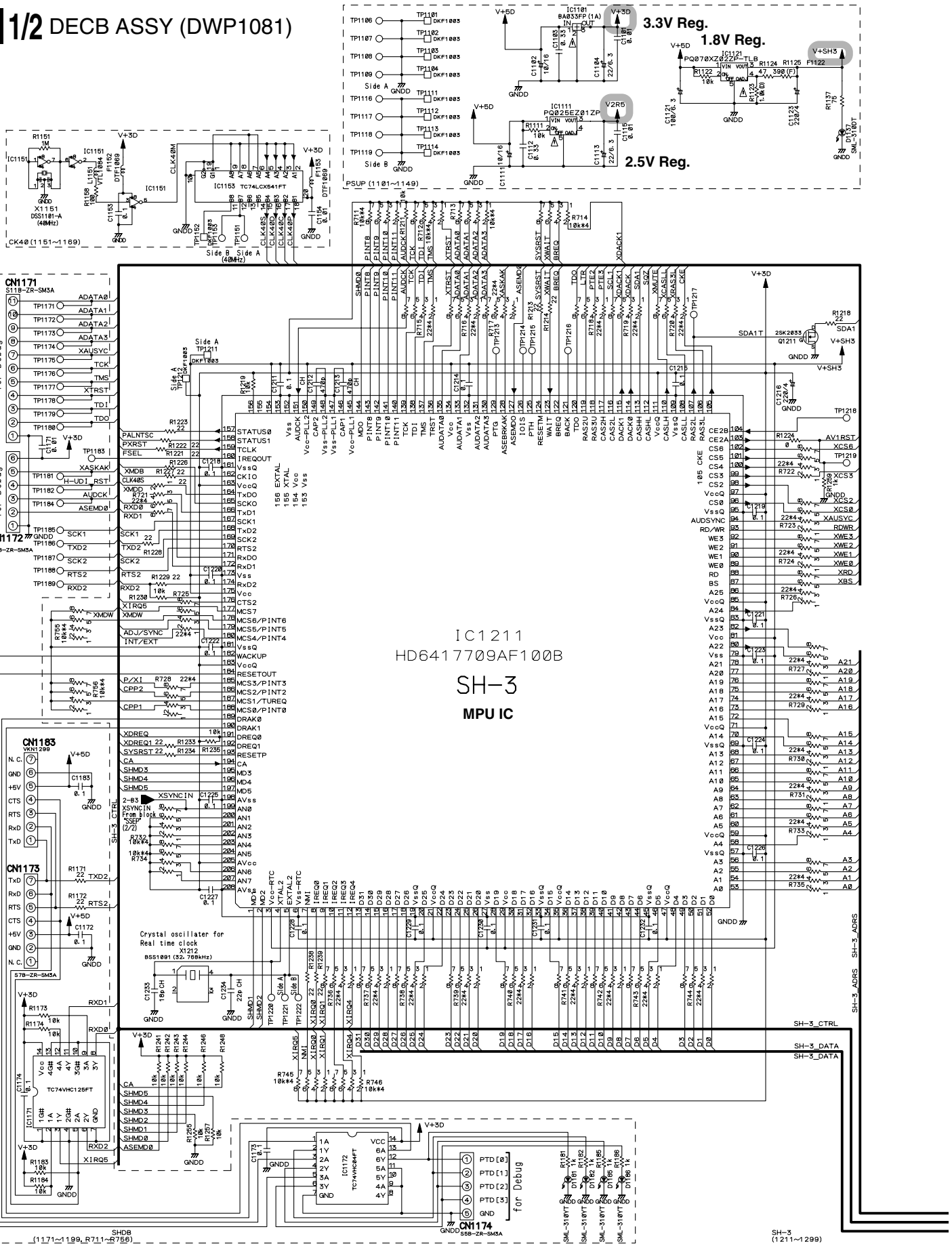

(P_DAV) : Playback Signal Route (Digital Audio/Video)

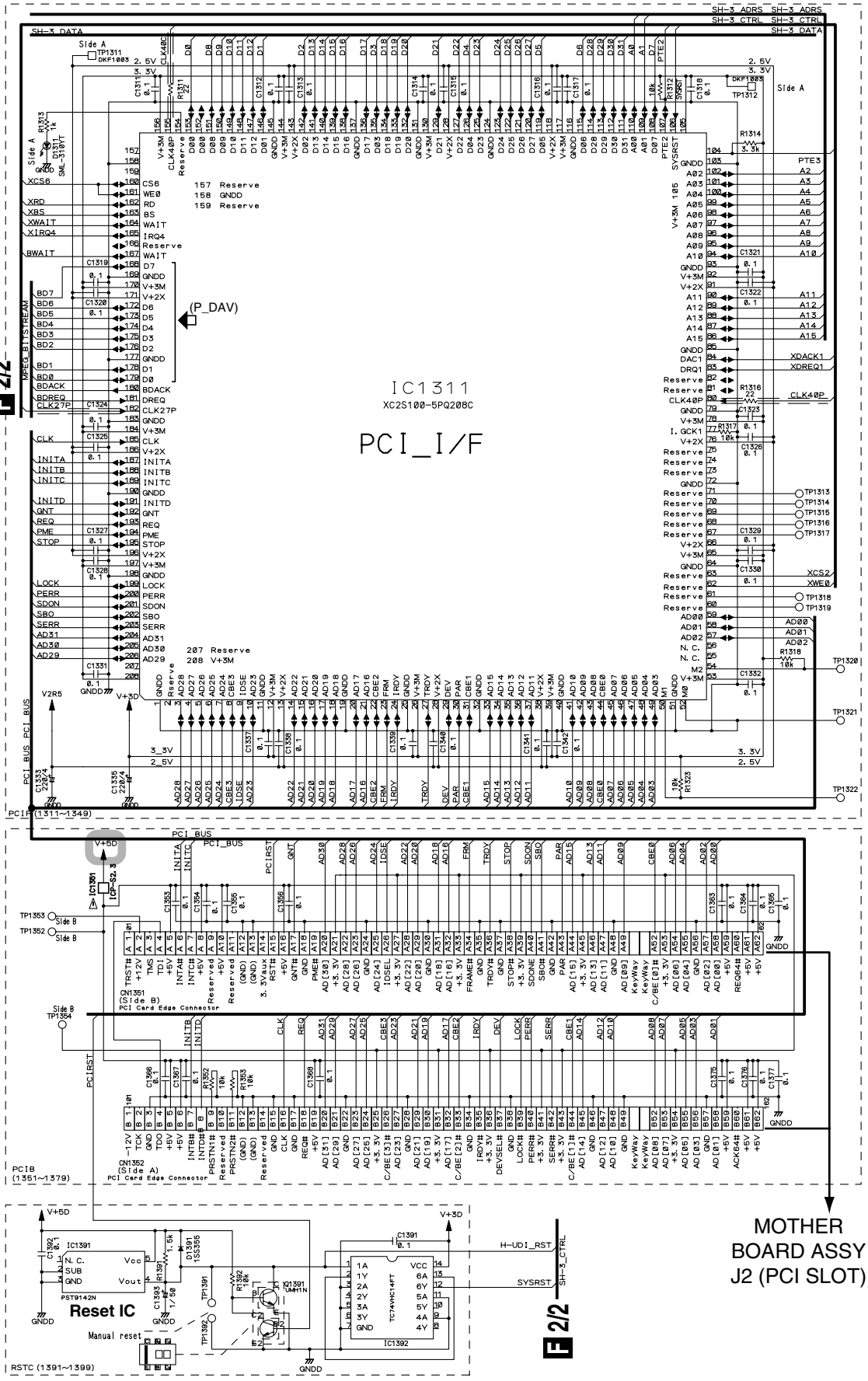

CAUTION : FOR CONTINUED PROTECTION AGAINST RISK OF FIRE, REPLACE ONLY WITH SAME TYPE NO. ICP-S2.3, MFD BY ROHM CO., LTD. FOR IC1351.

: The power supply is shown with the marked box.

F 1/2

3.9 DECB ASSY (2/2)

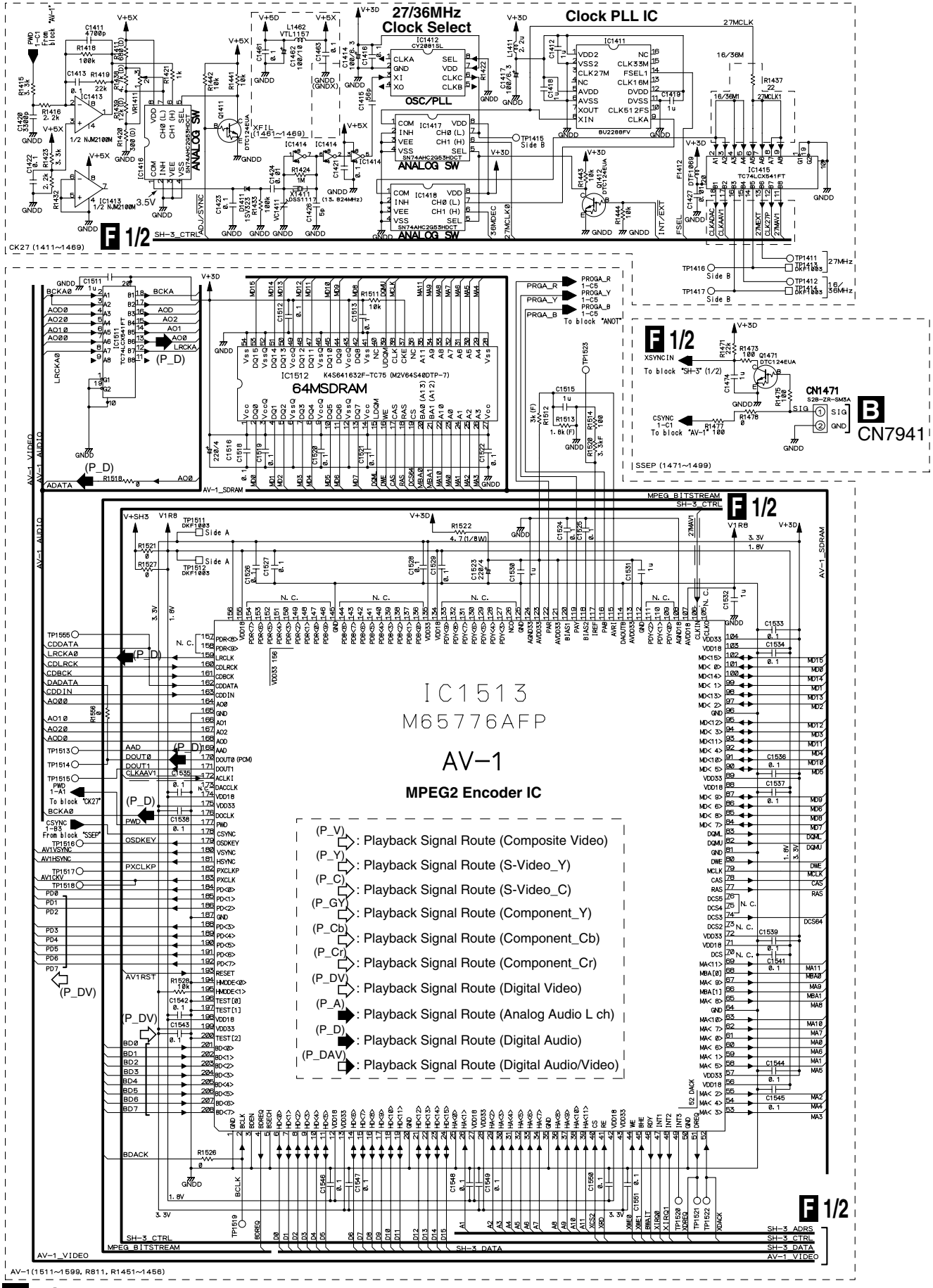

F 2/2 DECB ASSY (DWP1081)

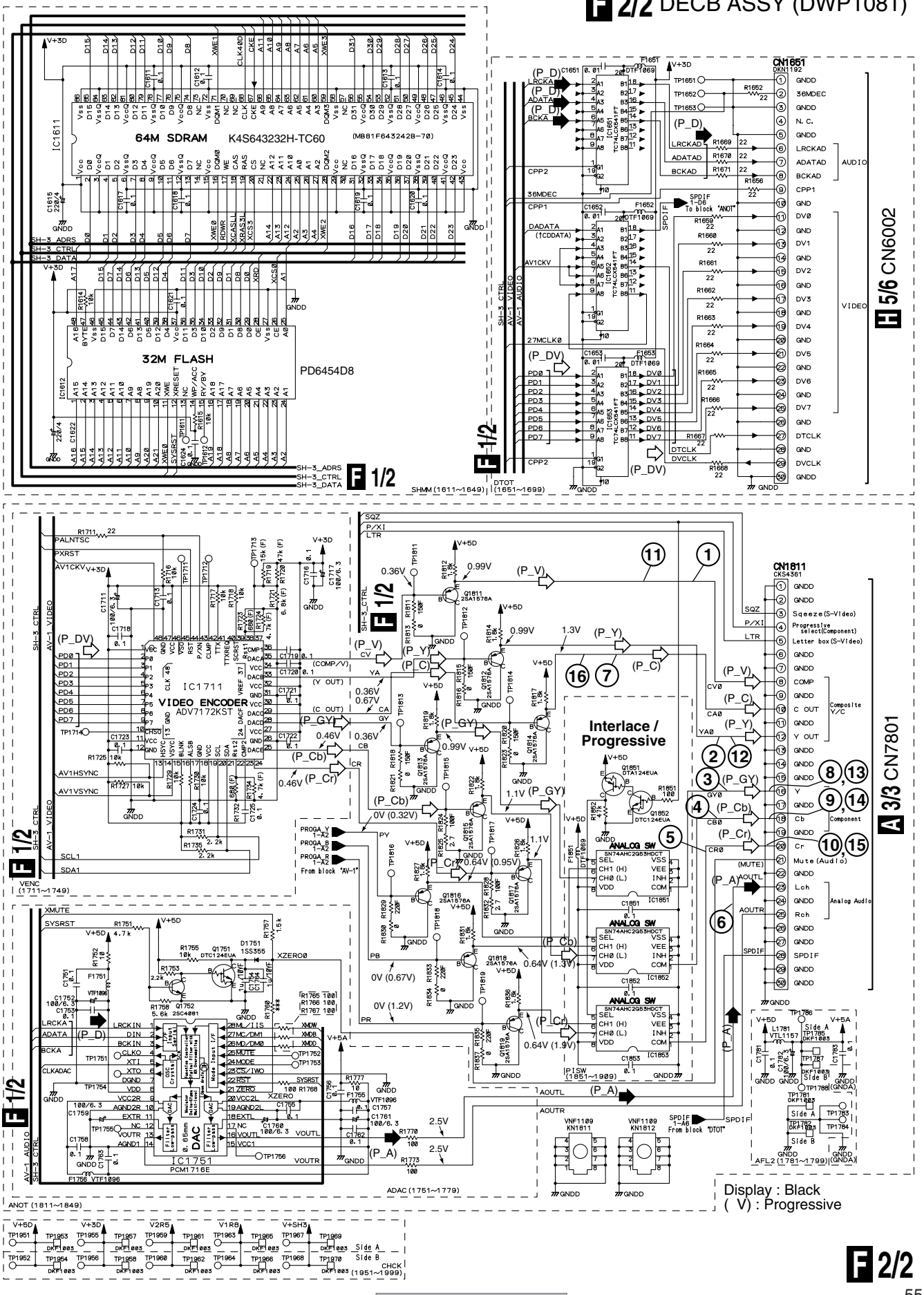

3.10 PCIB ASSY (1/4)

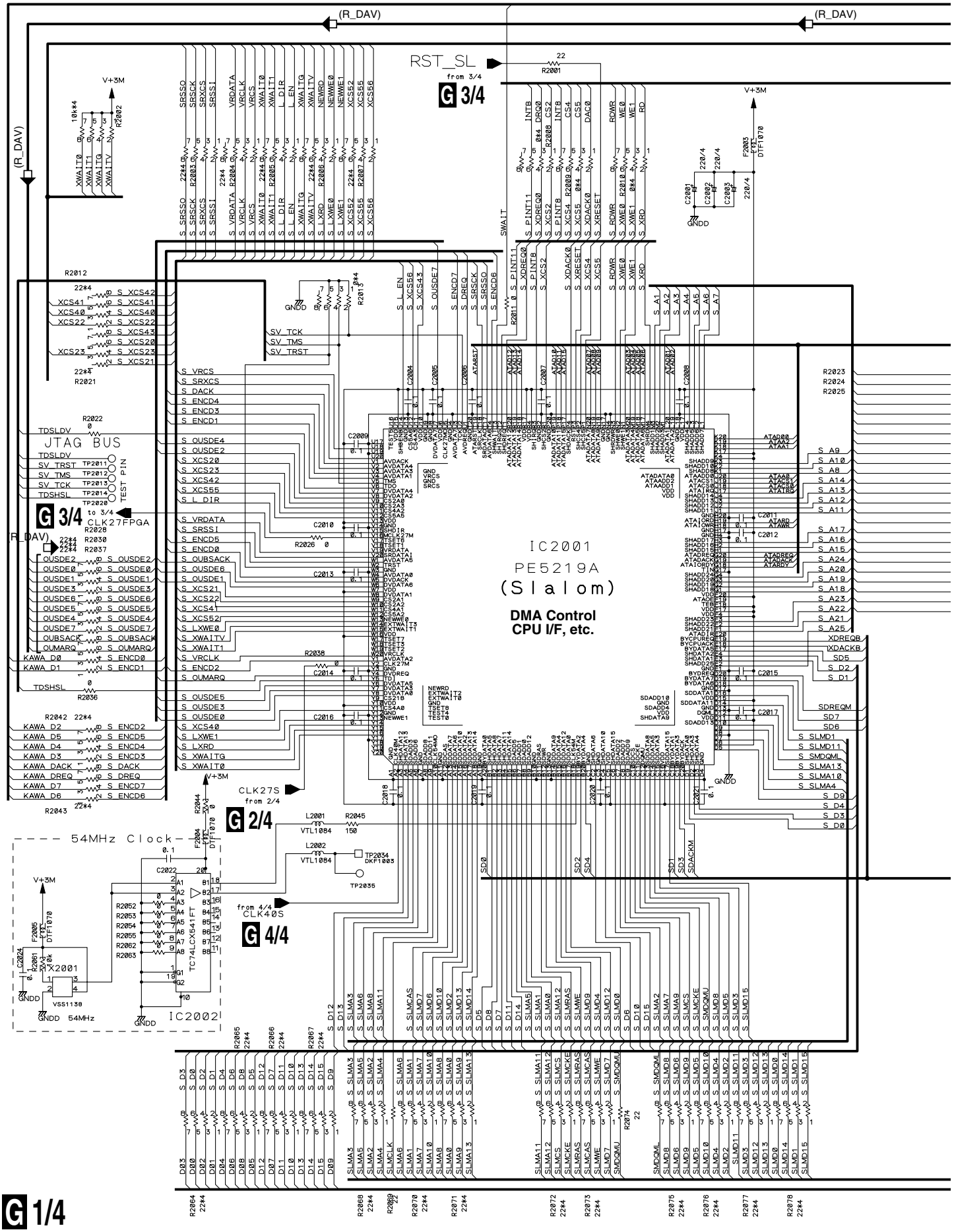

G 1/4 PCIB ASSY (DWP1080)

ENC DATA(to PCI FPGA)
(R_DAV) ENC DATA(From DVXcel)
SLC (Slalom CONTROL BUS) G 2/4, 3/4

SC (CPU CONTROL BUS (SH-3))
SA (CPU ADDRESS BUS (SH-3)) G 2/4 - 4/4
SD (CPU DATA BUS (SH-3))

(R_DAV) : Recording Signal Route (Digital Audio/Video)

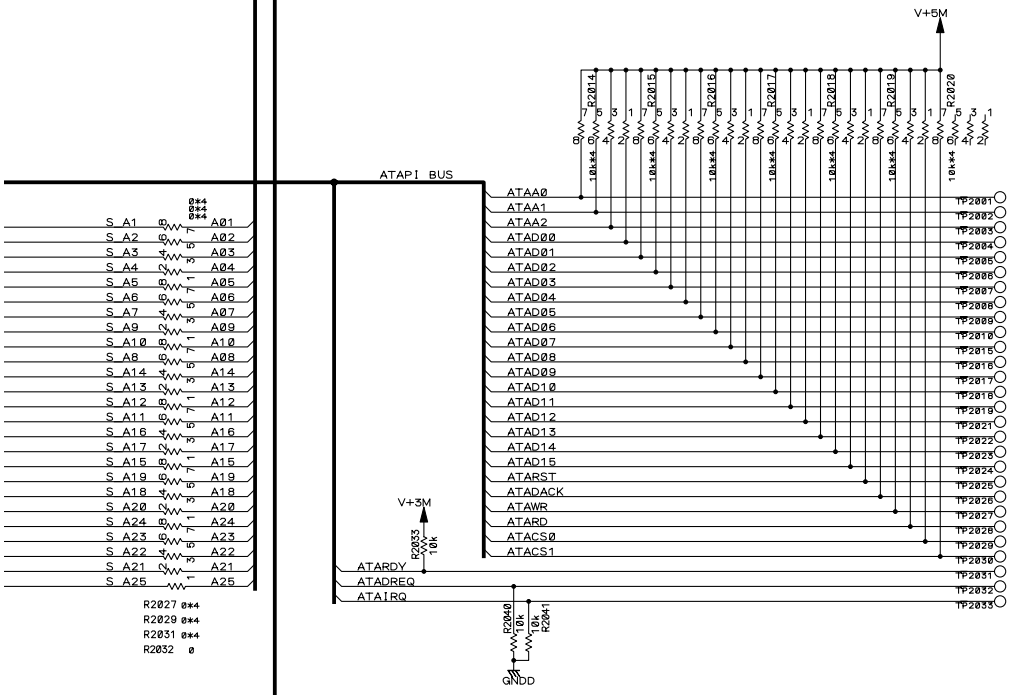

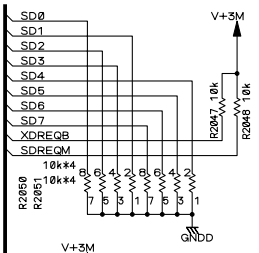

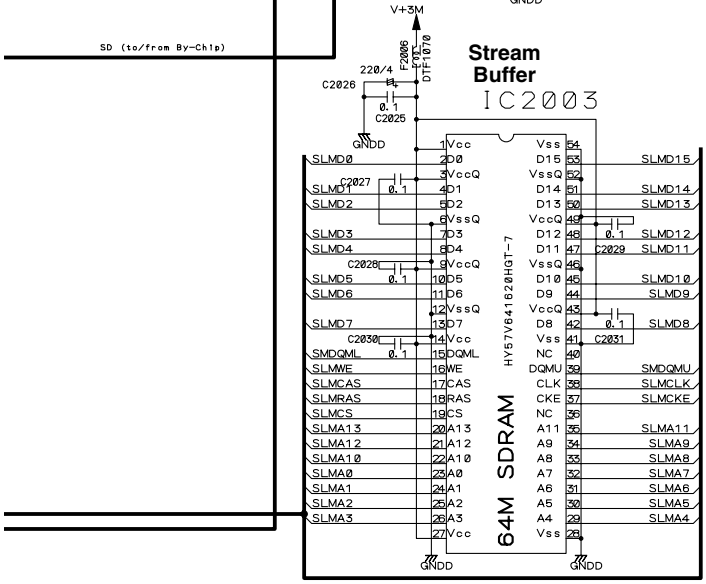

3.11 PCIB ASSY (2/4)

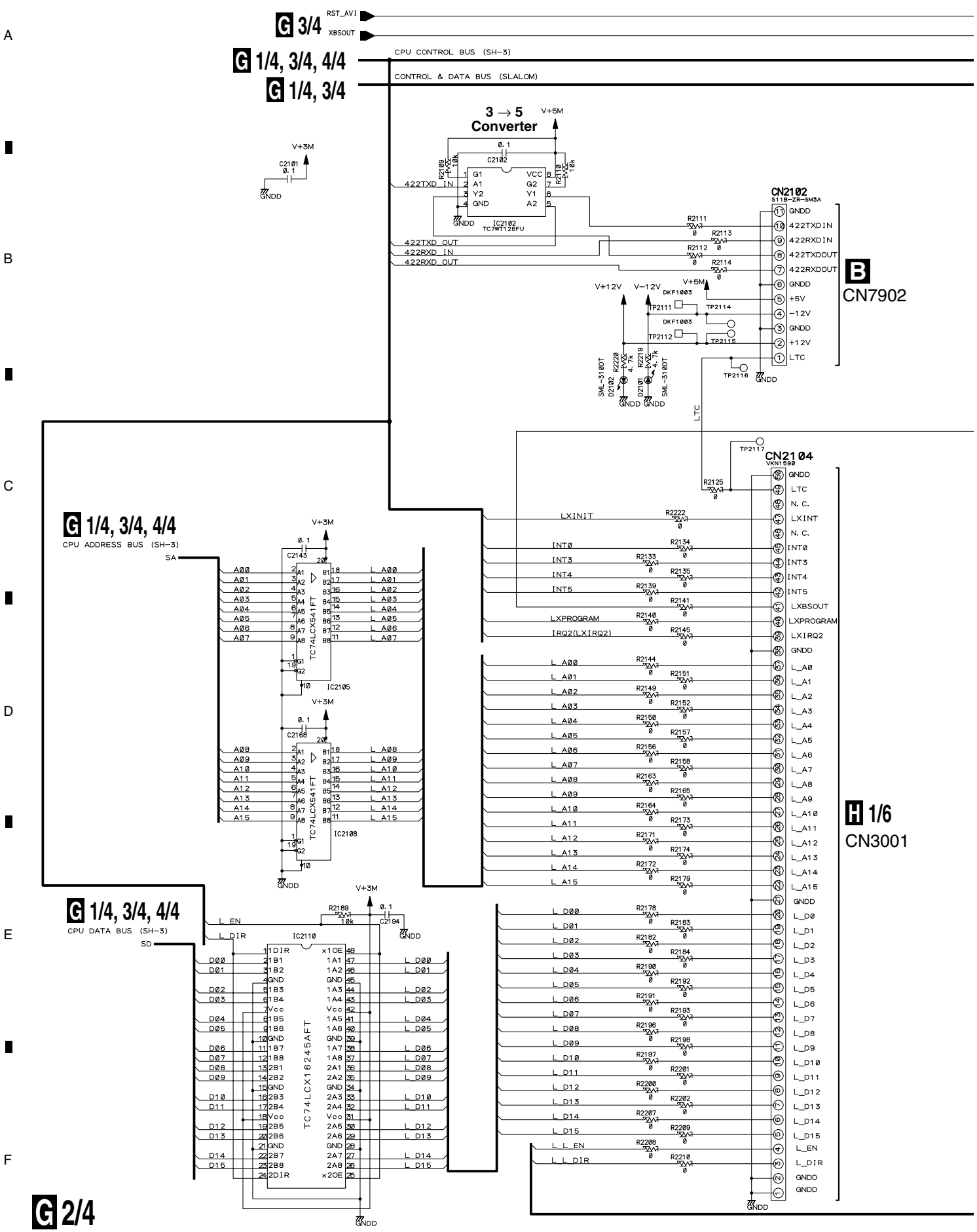

G 2/4 PCIB ASSY (DWP1080)

(R_DAV): Recording Signal Route (Digital Audio/Video)

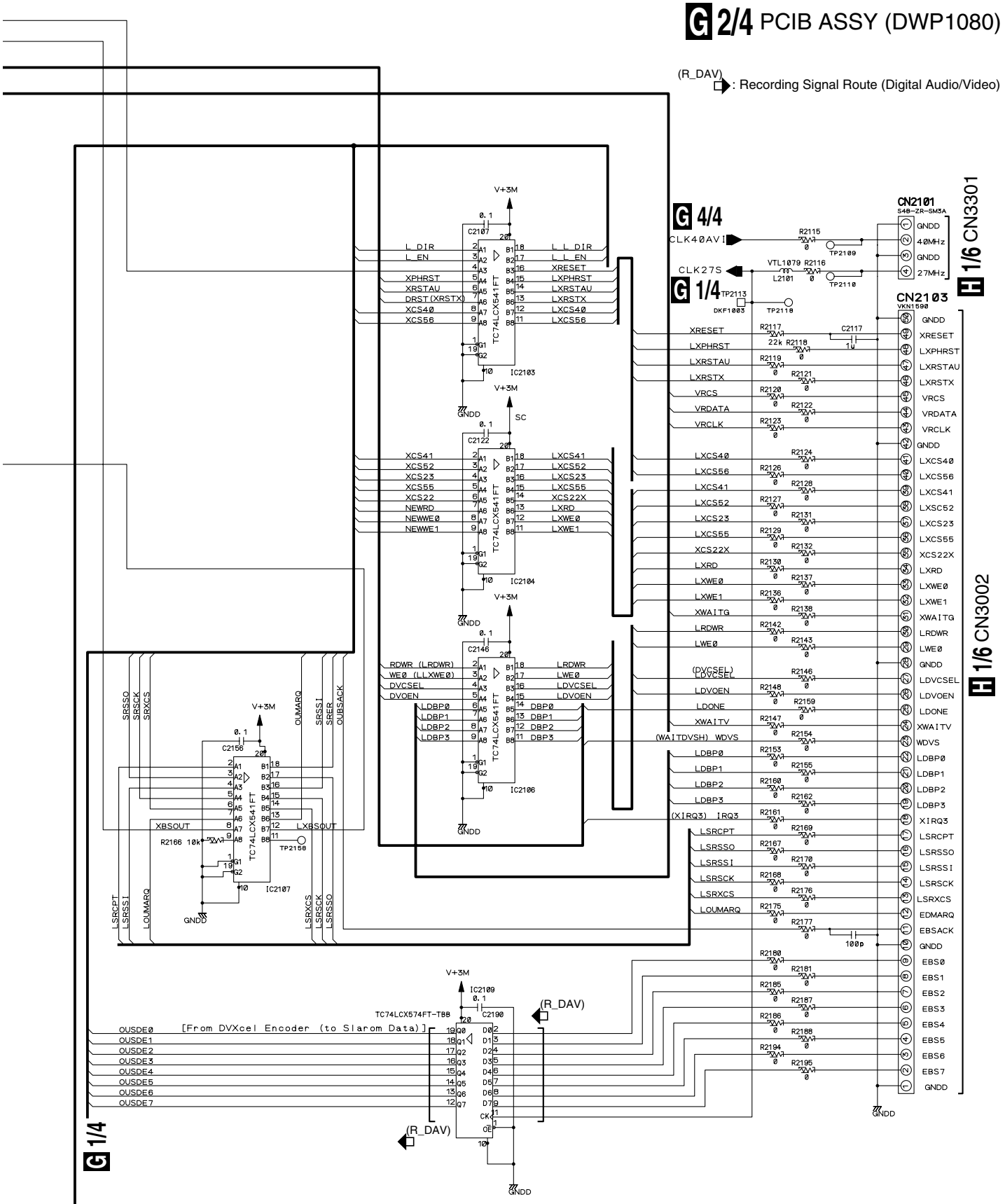

3.12 PCIB ASSY (3/4)

G 3/4 PCIB ASSY (DWP1080)

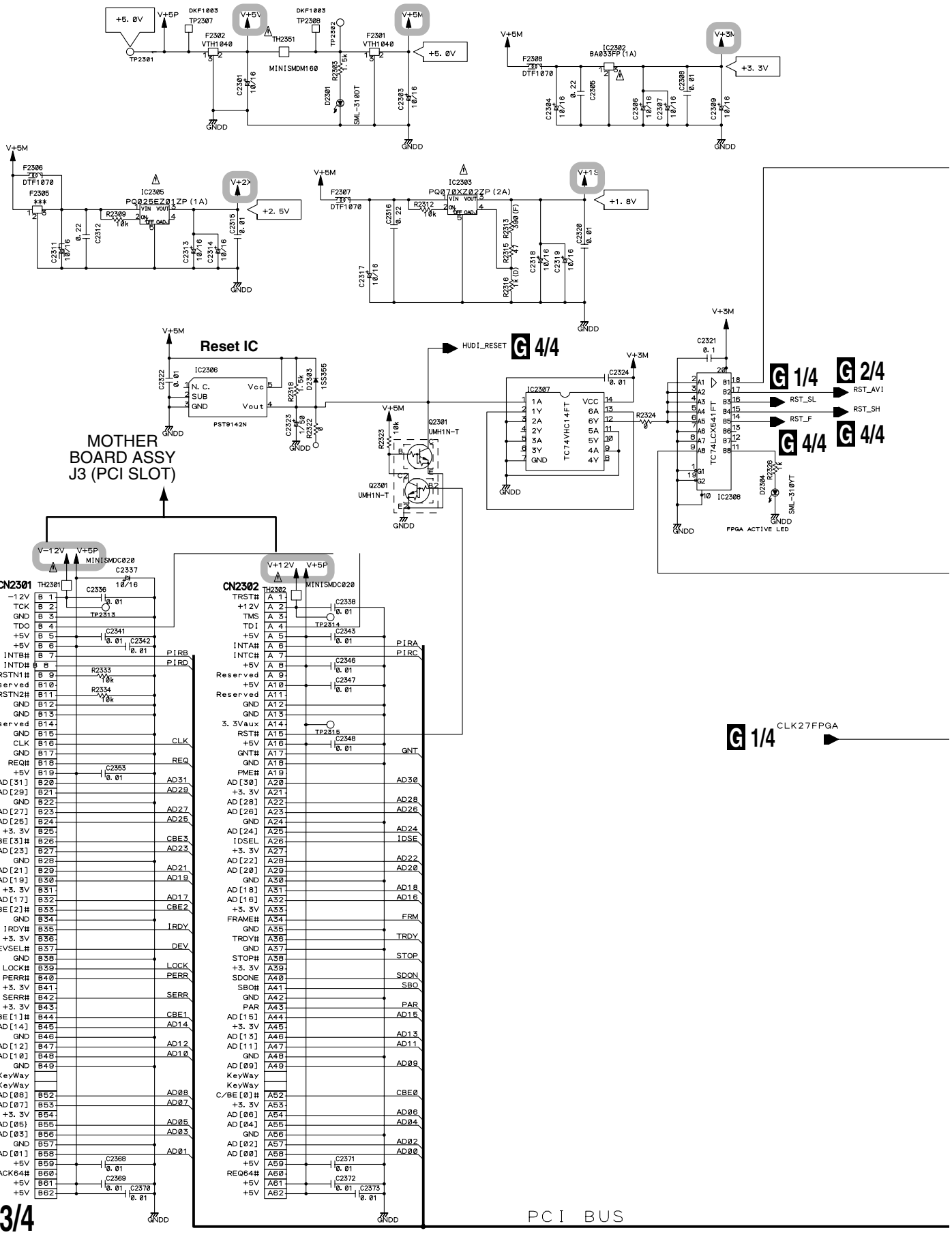

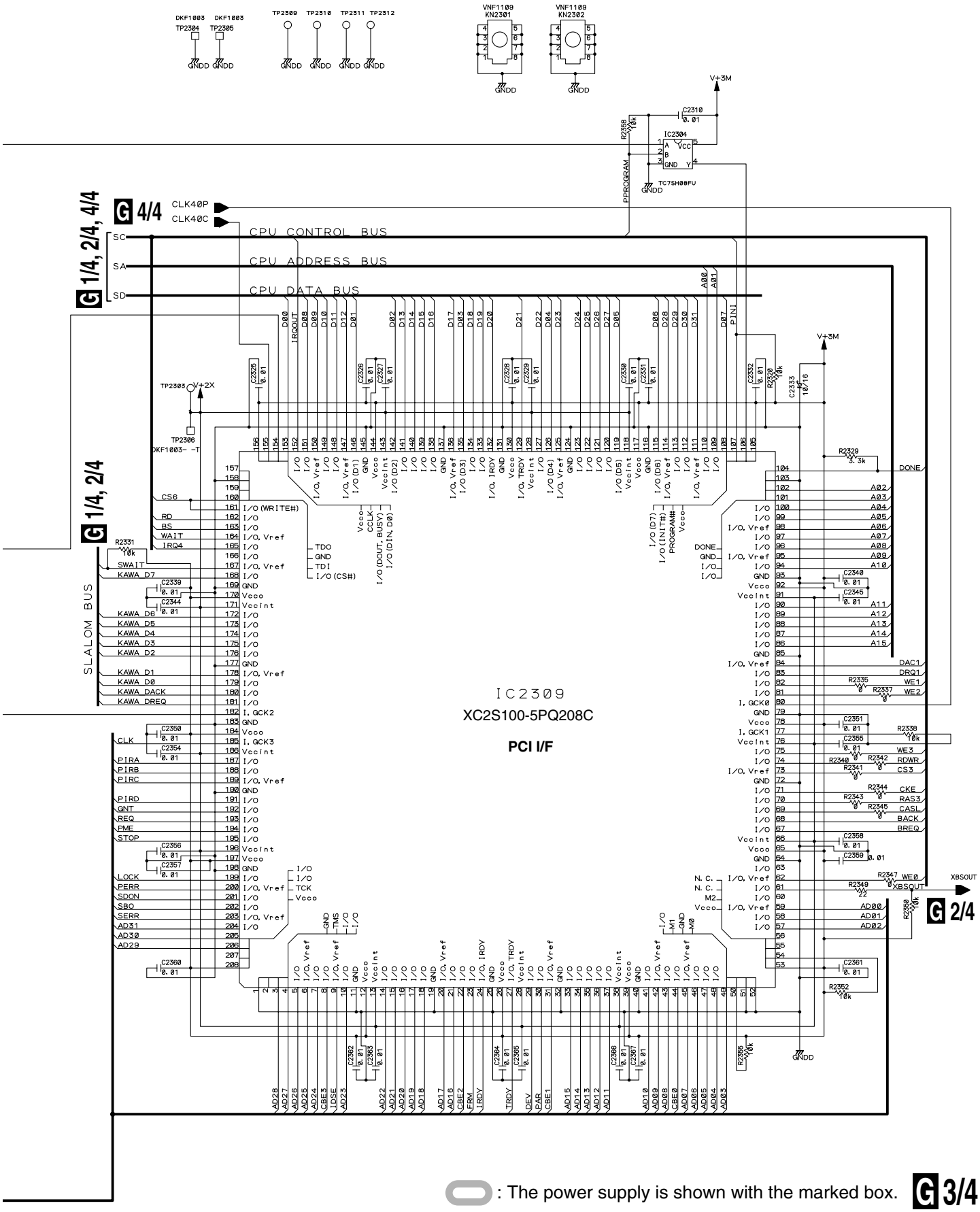

: The power supply is shown with the marked box.

3.13 PCIB ASSY (4/4)

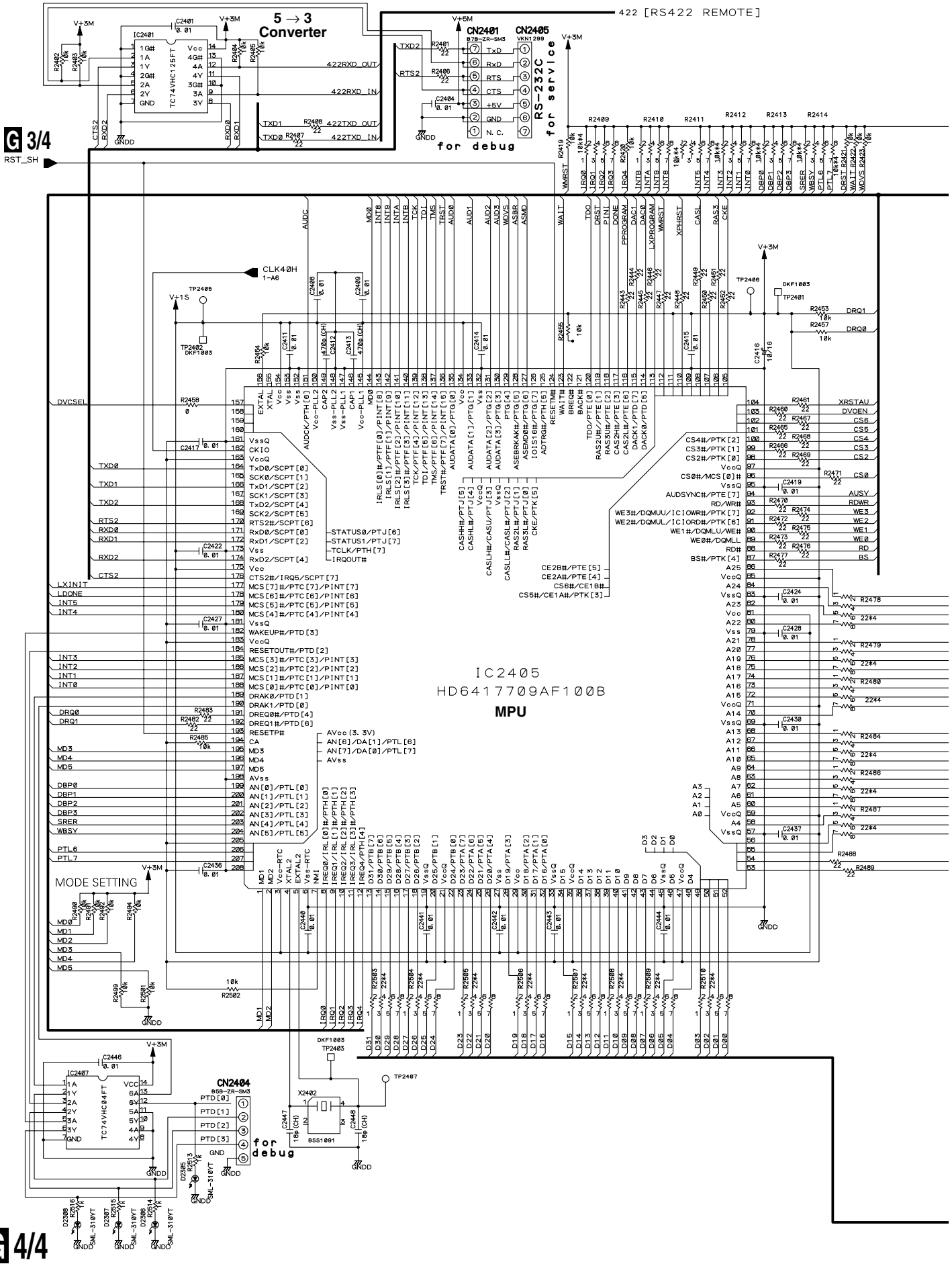

G 4/4 PCIB ASSY (DWP1080)

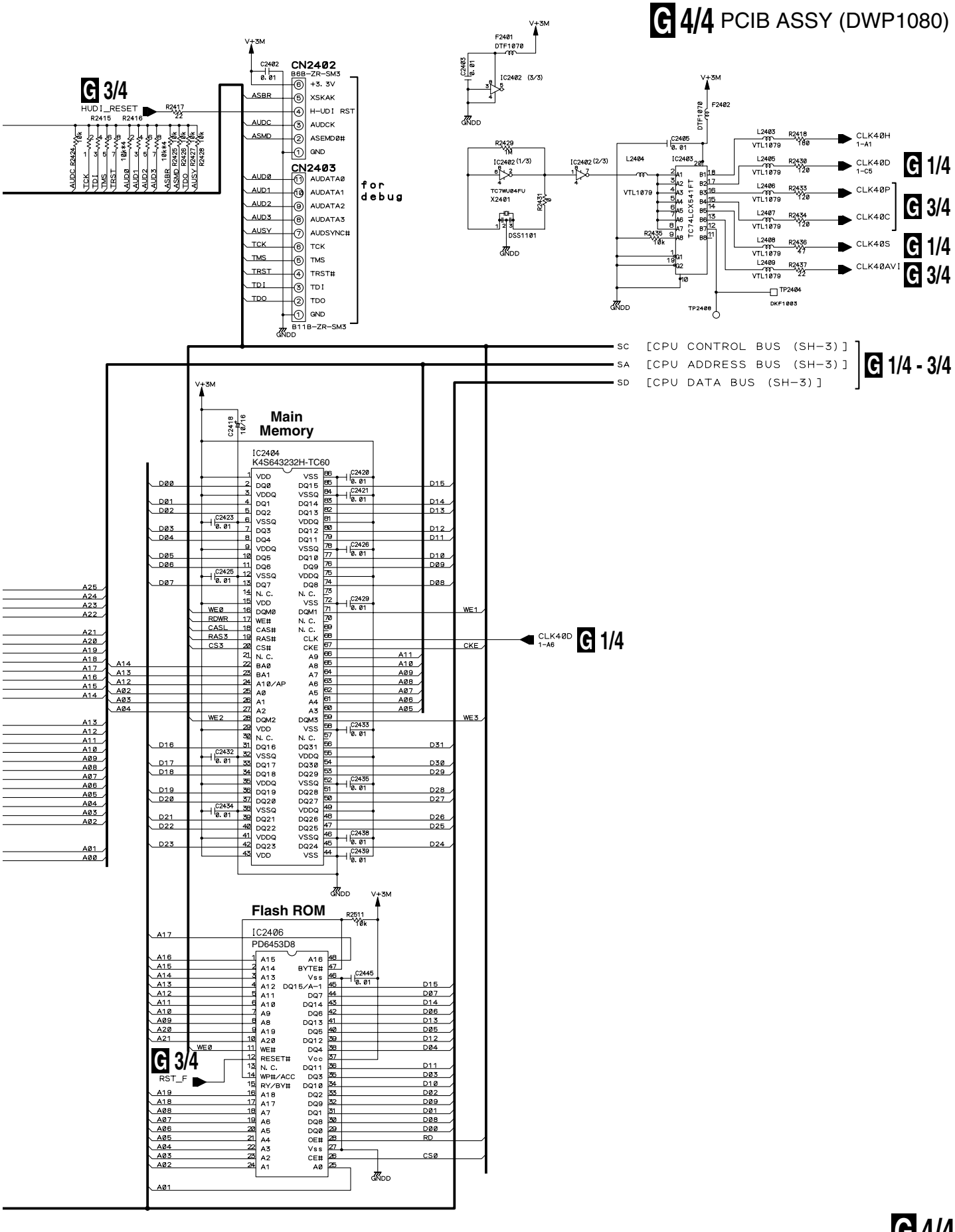

H 1/6 AVIB ASSY (DWV1202)

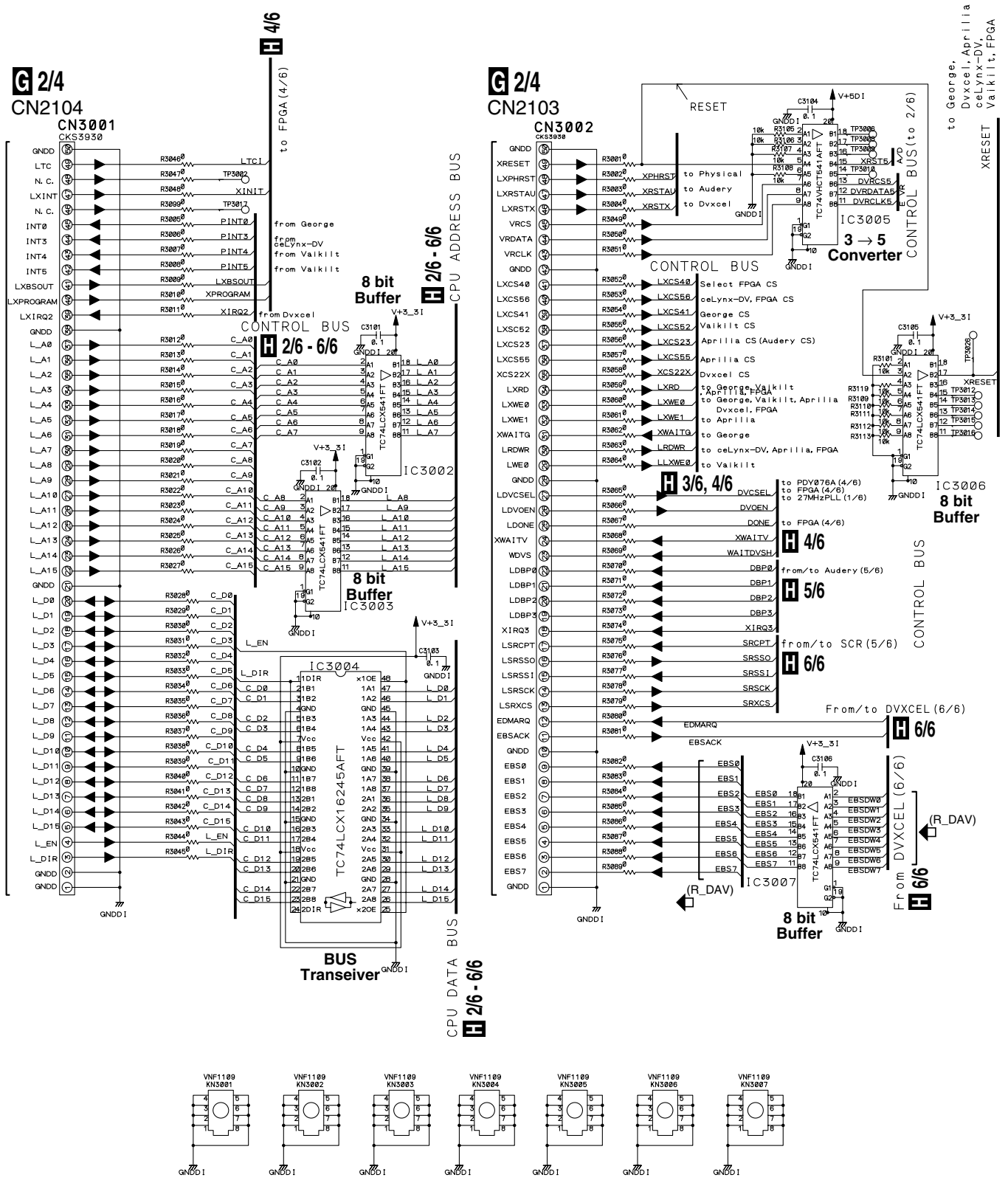

CAUTION : FOR CONTINUED PROTECTION AGAINST RISK OF FIRE, REPLACE ONLY WITH SAME TYPE NO. ICP-S2.3, MFD BY ROHM CO., LTD. FOR IC3205.

(R_DAV) : Recording Signal Route (Digital Audio/Video)

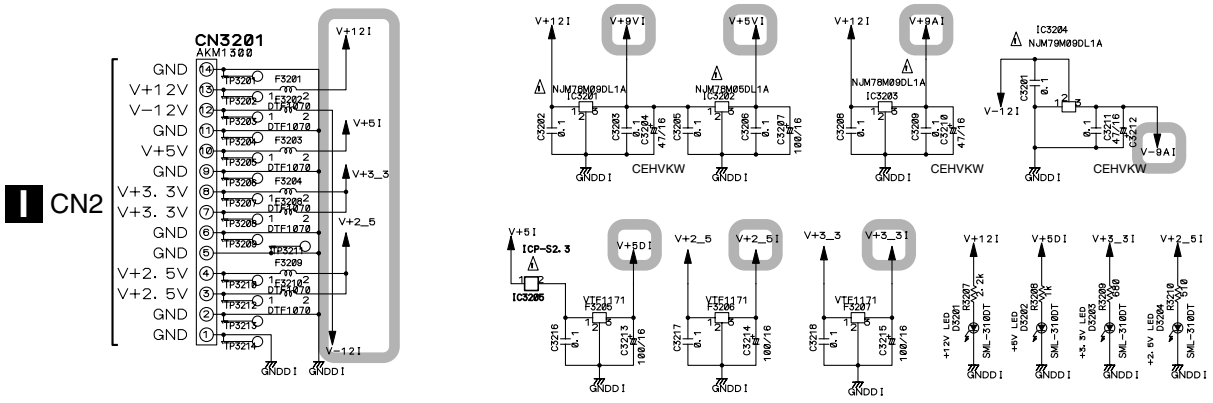

Power Circuit Block

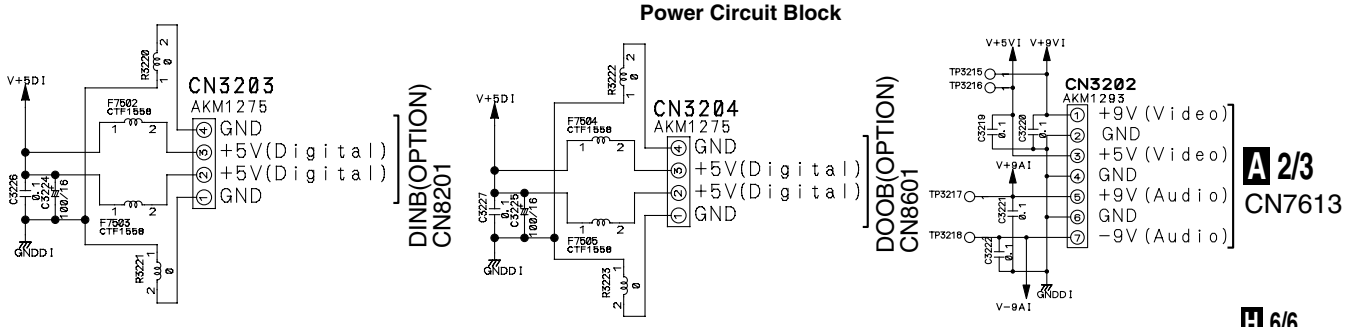

Clock Circuit Block

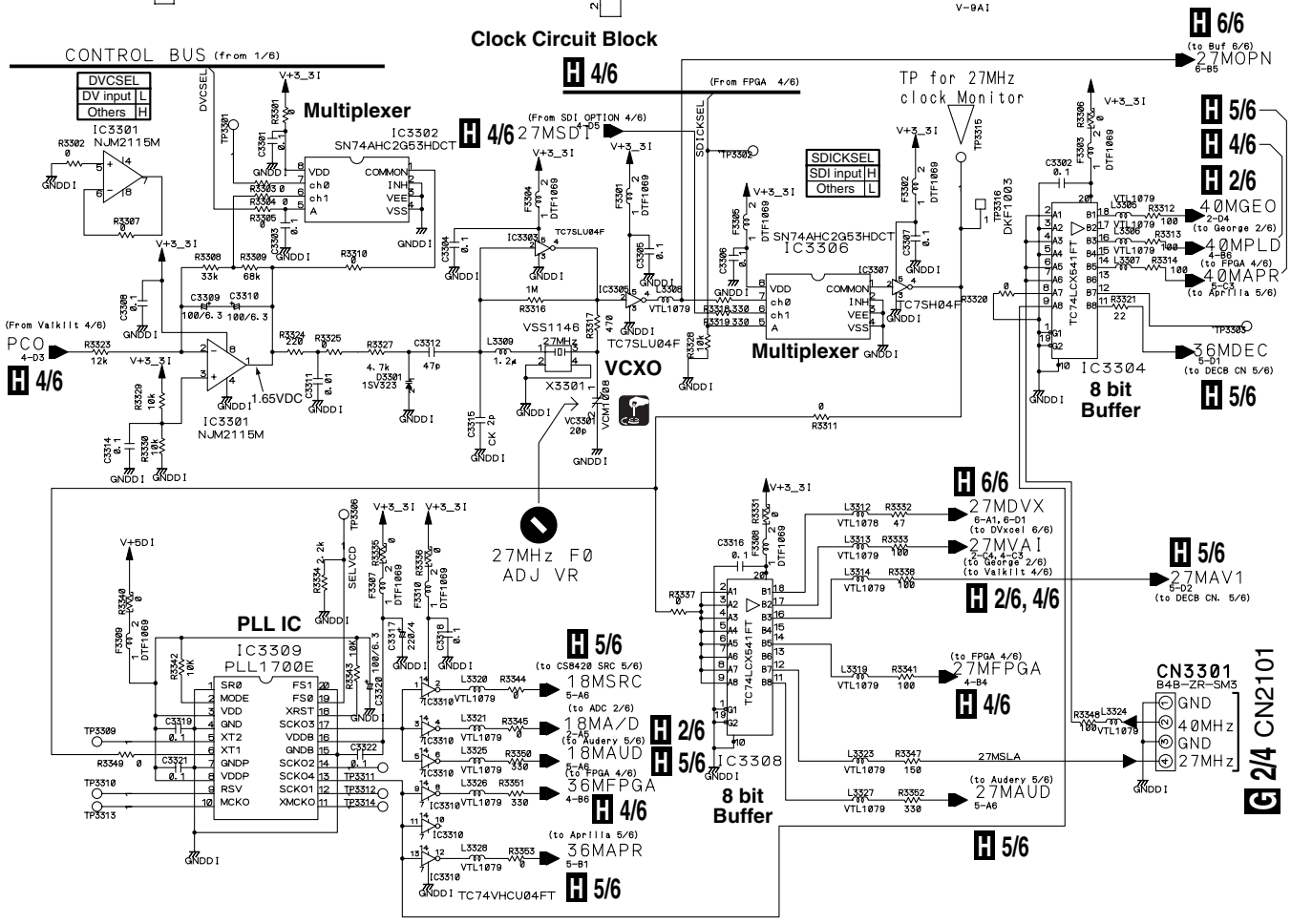

: The power supply is shown with the marked box.

H 1/6

3.15 AVIB ASSY (2/6)

H 2/6 AVIB ASSY (DWV1202)

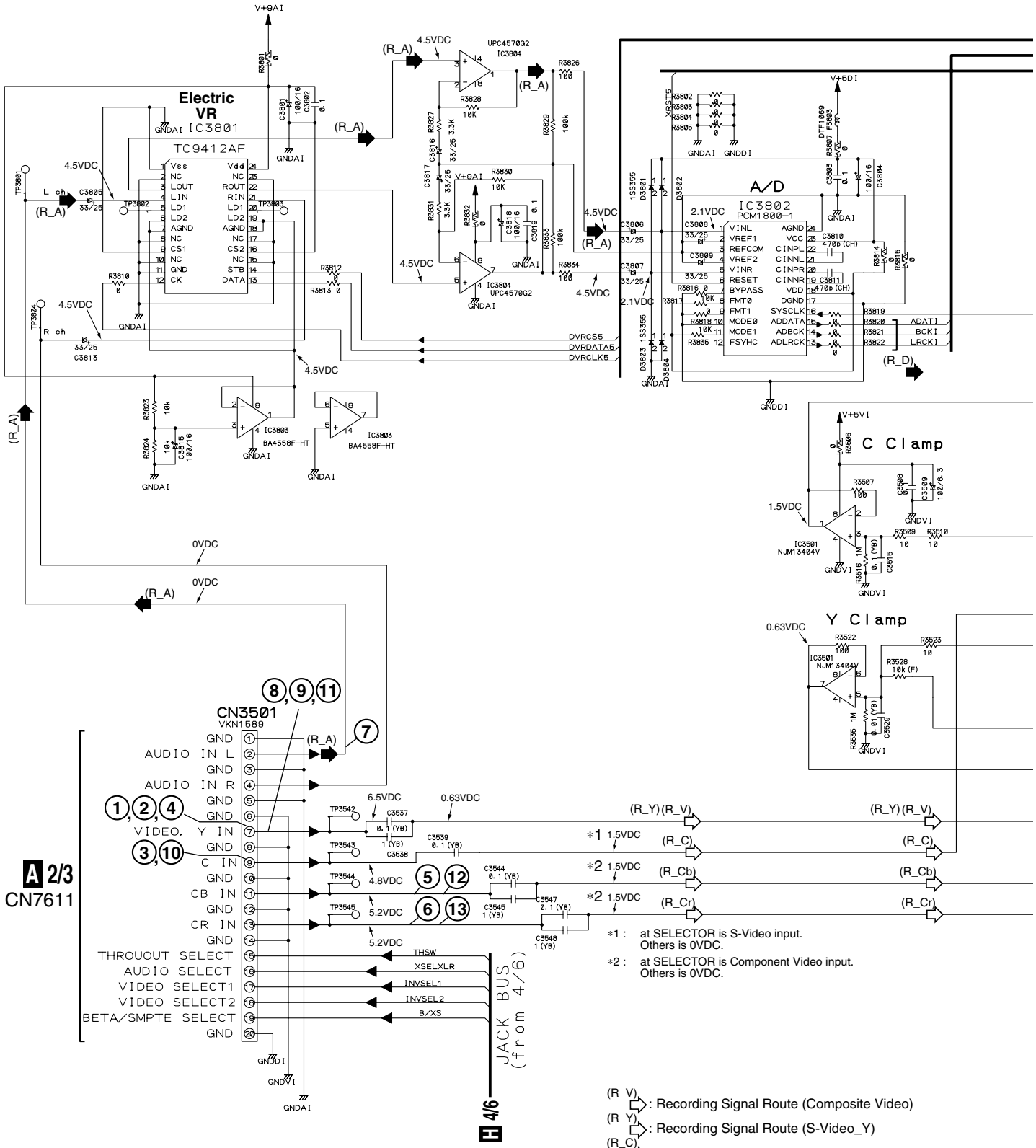

*1 : at SELECTOR is S-Video input.
Others is 0VDC.

*2 : at SELECTOR is Component Video input.
Others is 0VDC.

	(default)	
	L	H
THROUOUT SELECT	NON	THROU
AUDIO SELECT	RCA	XLR
VIDEO SELECT 1	CVBS	S
VIDEO SELECT 2	CV/S	YPbPr
BETA/SMPTE SELECT	BETA	SMPTE

(R_V) : Recording Signal Route (Composite Video)
(R_Y) : Recording Signal Route (S-Video_Y)
(R_C) : Recording Signal Route (S-Video_C)
(R_Cb) : Recording Signal Route (Component_Cb)
(R_Cr) : Recording Signal Route (Component_Cr)
(R_DV) : Recording Signal Route (Digital Video)
(R_A) : Recording Signal Route (Analog Audio L ch)
(R_D) : Recording Signal Route (Digital Audio)

H 2/6

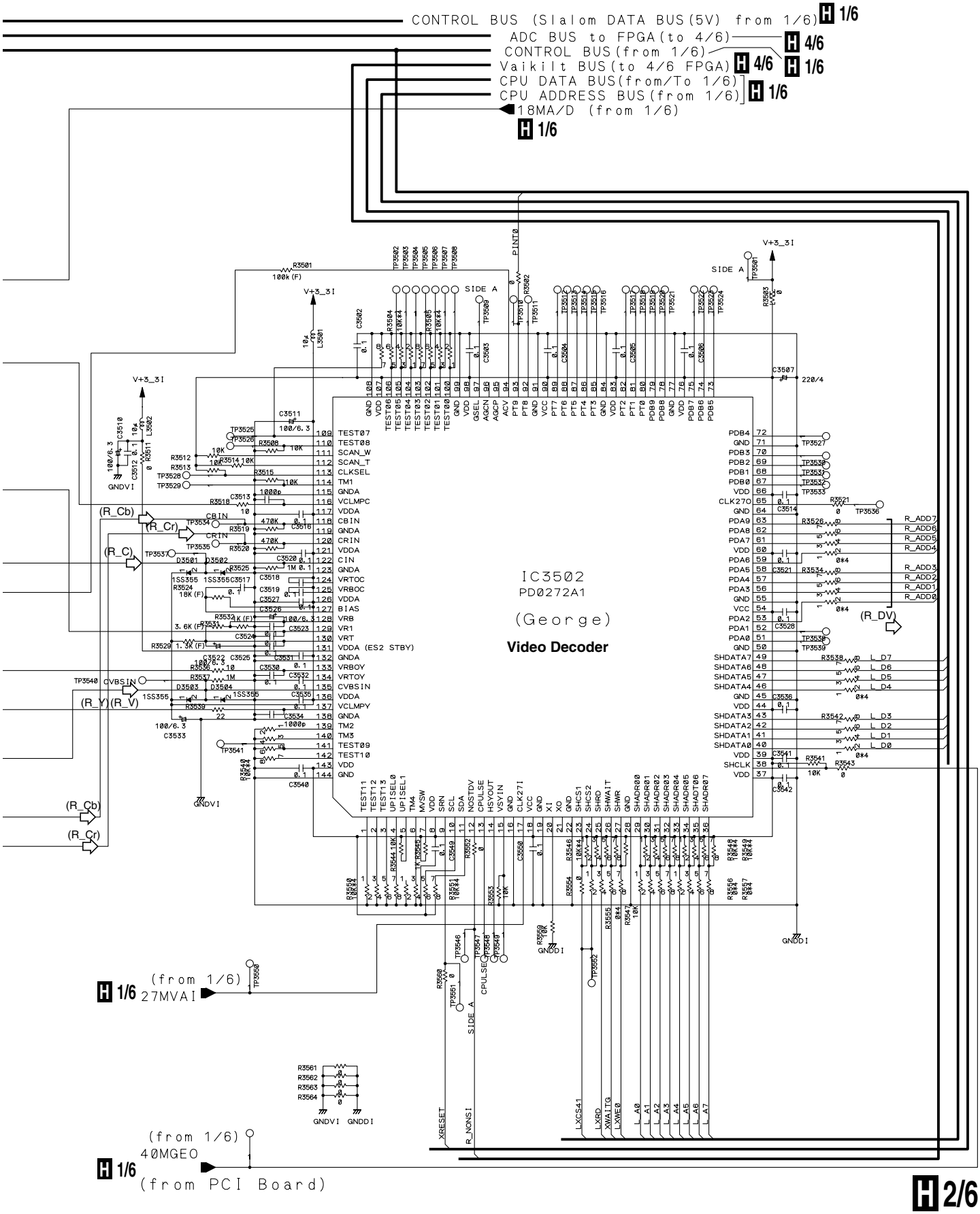
CONTROL BUS (SIalom DATA BUS(5V) from 1/6) H 1/6
ADC BUS to FPGA(to 4/6) H 4/6
CONTROL BUS(from 1/6) H 4/6 H 1/6
Vaikilt BUS(to 4/6 FPGA) H 1/6
CPU DATA BUS(from/To 1/6)
CPU ADDRESS BUS(from 1/6)
18MA/D (from 1/6)
IC3502
PD0272A1
(George)
Video Decoder
(from 1/6) 27MVAI
(from 1/6) 40MGEO
(from PCI Board)
H 2/6

3.16 AVIB ASSY (3/6)

H 3/6 AVIB ASSY (DWV1202)

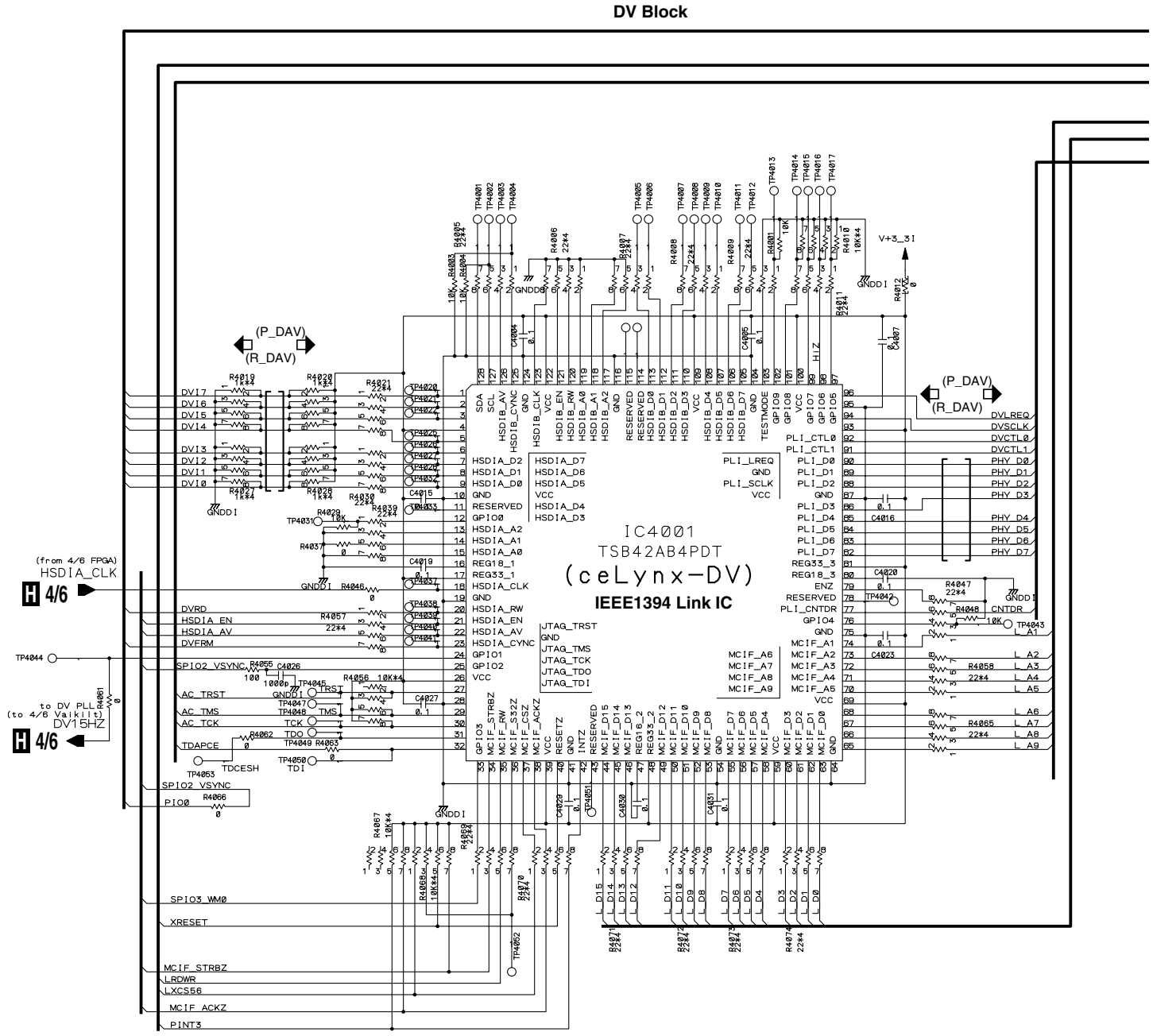

(R_DAV) : Recording Signal Route (Digital Audio/Video)
(P_DAV) : Playback Signal Route (Digital Audio/Video)

DV BUS(From/To DVecxl IC 6/6) H 6/6
CONTROL BUS(From 1/6) H 1/6
JTAG H 4/6 - 6/6
CPU ADDRESS BUS(From 1/6) H 1/6
CPU DATA BUS(From/To 1/6) H 1/6

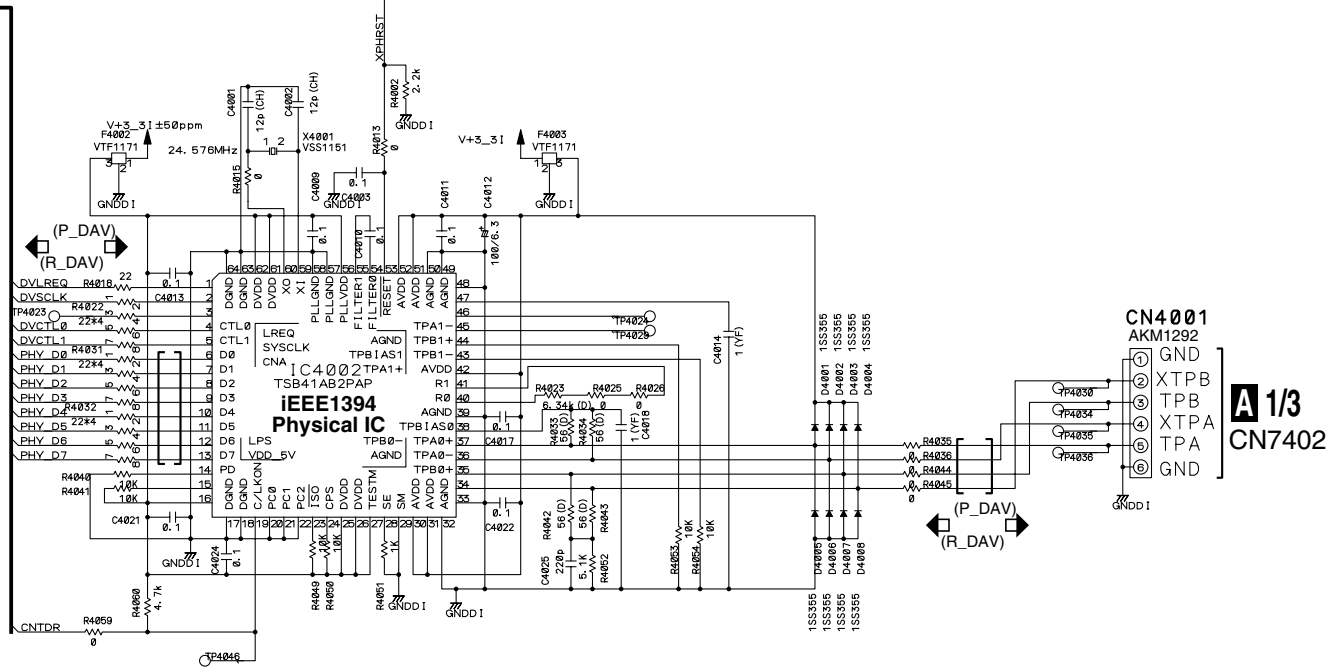

3.17 AVIB ASSY (4/6)

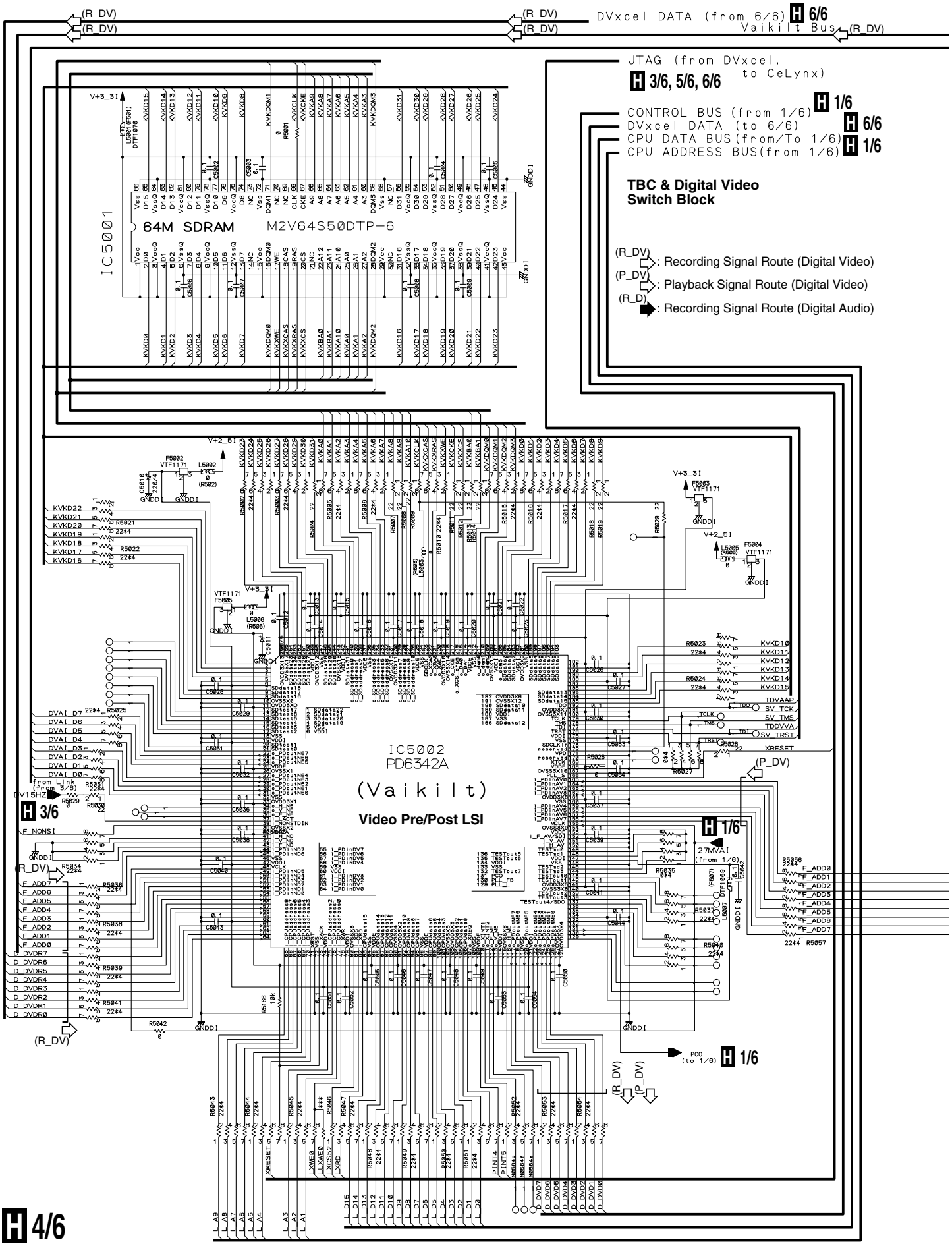

H 4/6 AVIB ASSY (DWV1202)

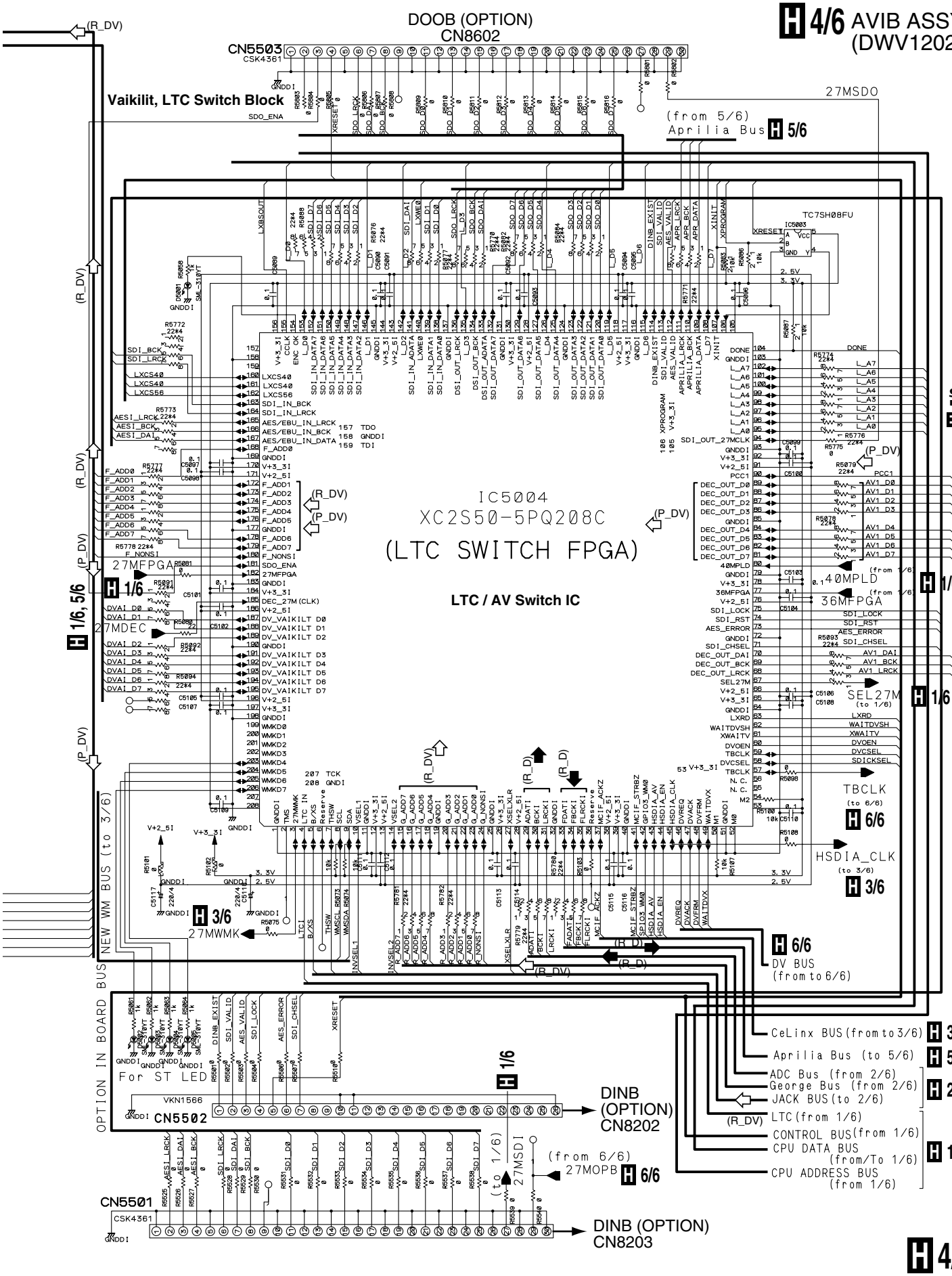

3.18 AVIB ASSY (5/6)

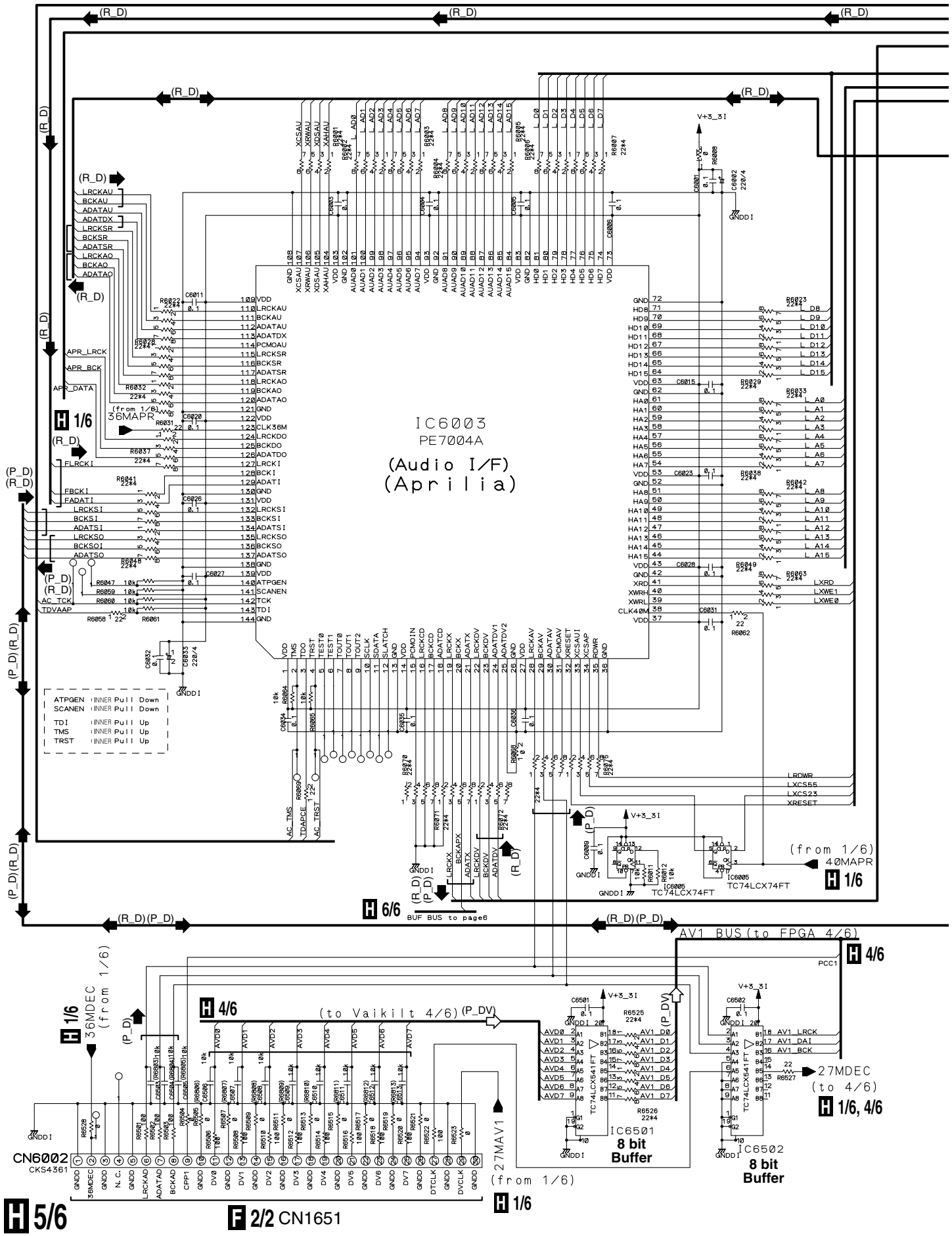

JTAG BUS H 3/6, 4/6, 6/6
Aprilia BUS(from FPGA)(from 4/6) H 4/6
Aprilia BUS(to FPGA)(to 4/6)
DVxcel BUS(form/to 6/6) H 6/6

CPU DATA BUS(from/To 1/6)
CPU ADDRES BUS (from 1/6)
CONTROL BUS (from 1/6)
18MAUD (from 1/6)
27MAUD (from 1/6)
18MSRC (from 1/6)
H 1/6

DD Codec & Audio Switch Block

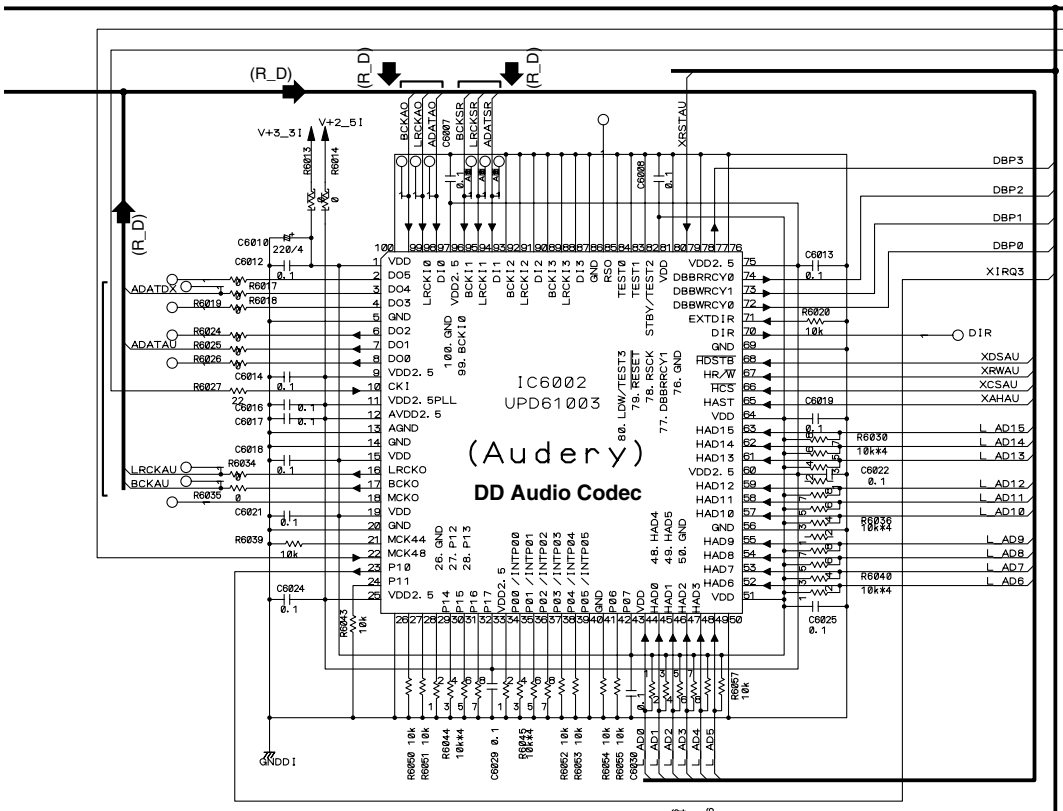

H 5/6 AVIB ASSY (DWV1202)

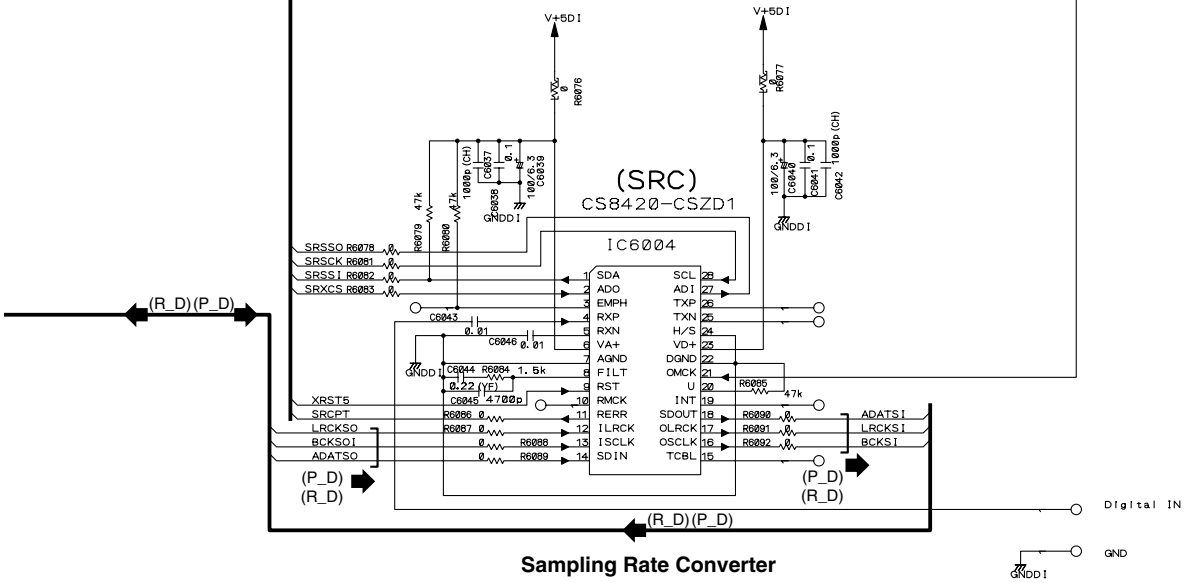

Sampling Rate Converter

(P_DV): Playback Signal Route (Digital Video)
(R_D): Recording Signal Route (Digital Audio)
(P_D): Playback Signal Route (Digital Audio)

H 5/6

3.19 AVIB ASSY (6/6)

H 6/6 AVIB ASSY (DWV1202)

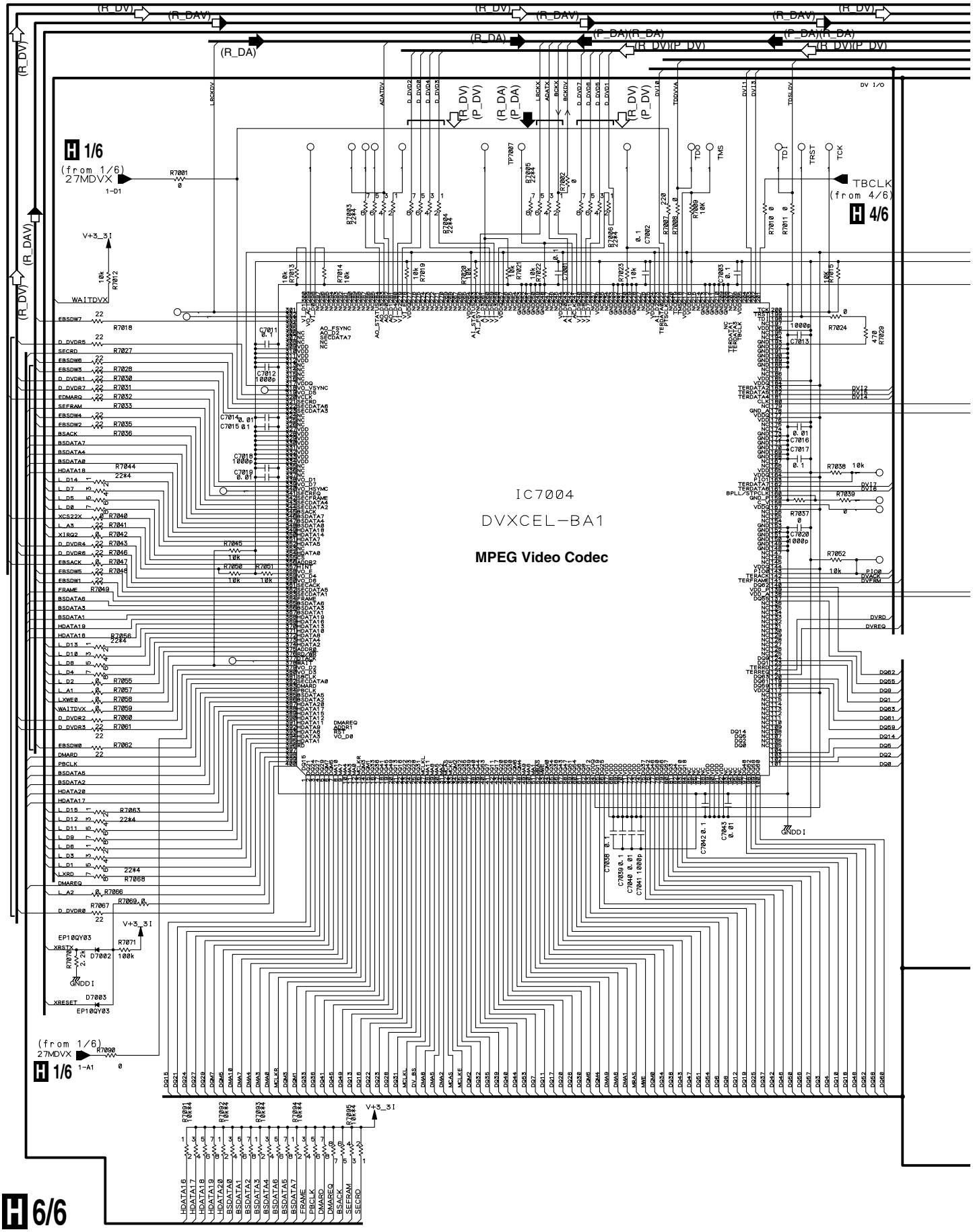

H 6/6

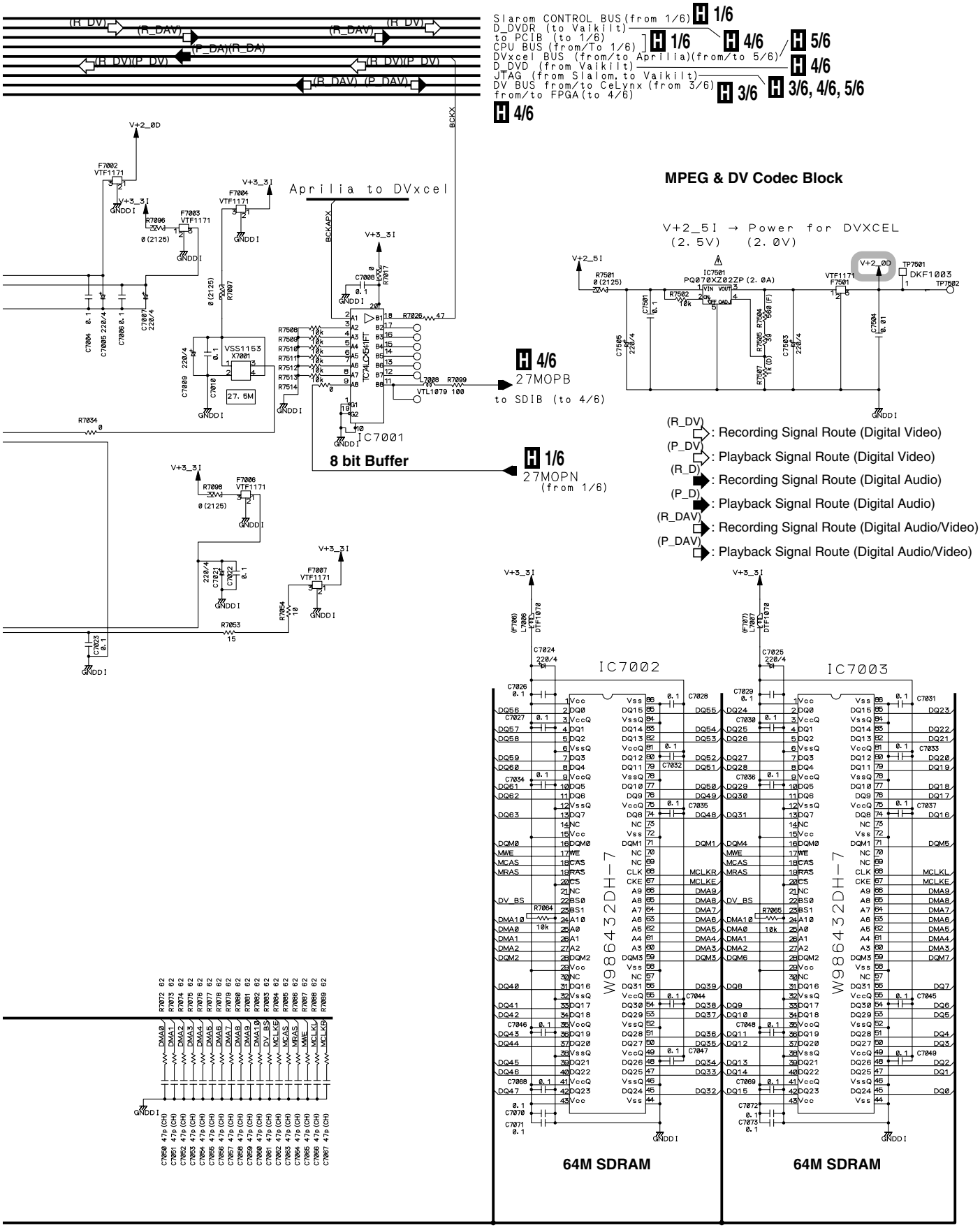

: The power supply is shown with the marked box.

H 6/6

3.20 PWRB(POLY) ASSY

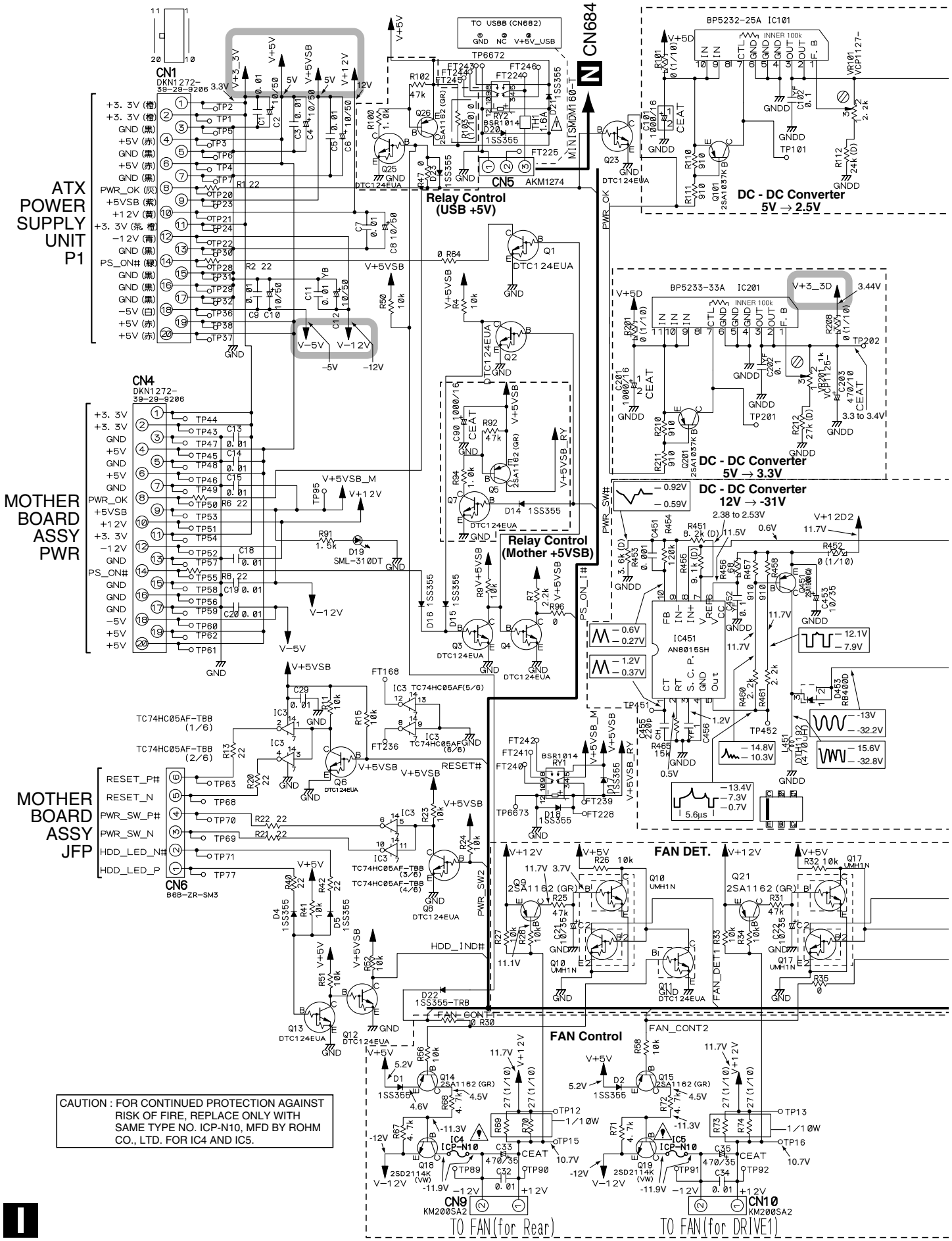

I PWRB(POLY) ASSY (DWZ1129)

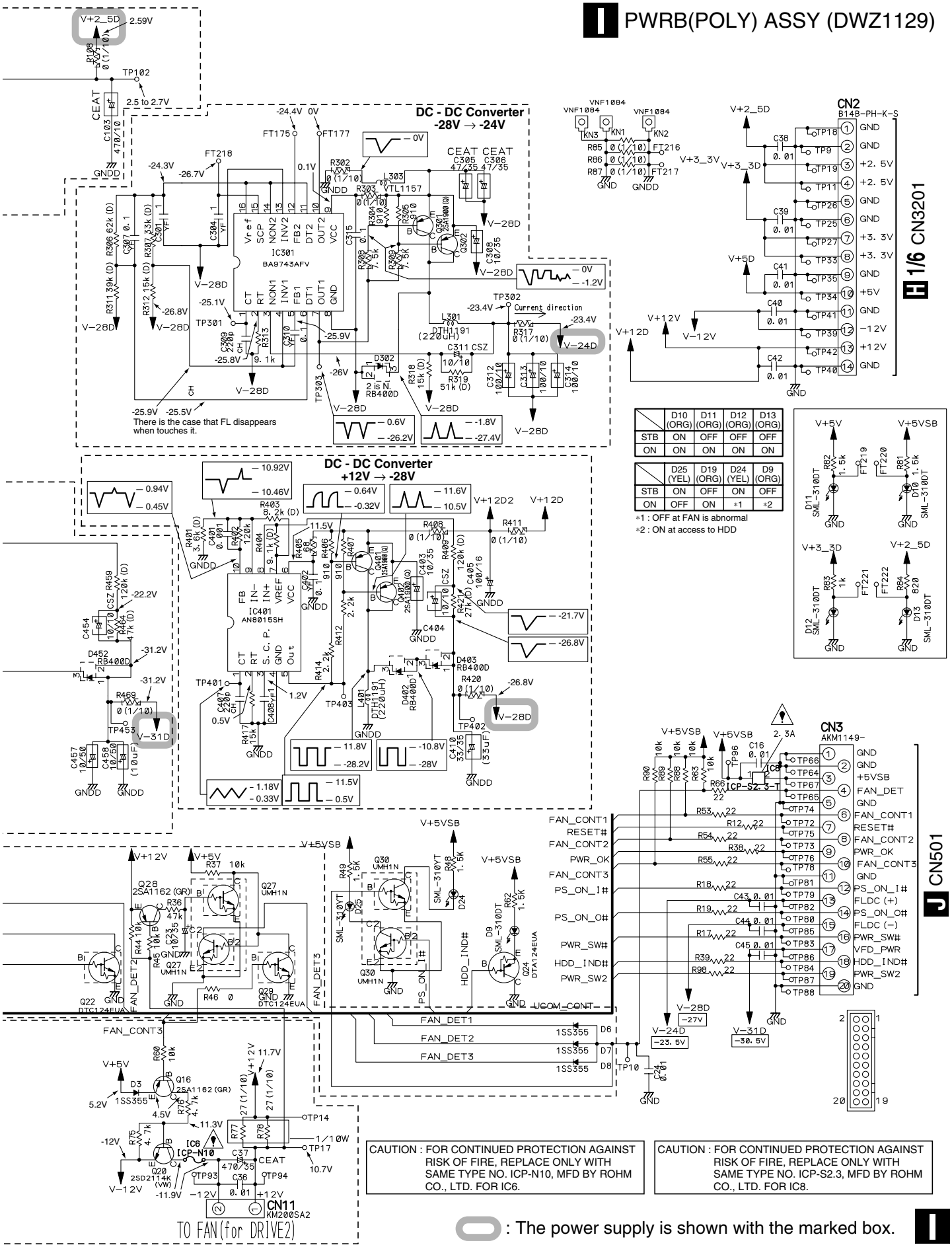

	D10 (ORG)	D11 (ORG)	D12 (ORG)	D13 (ORG)
STB	ON	OFF	OFF	OFF
ON	ON	ON	ON	ON

	D25 (YEL)	D19 (ORG)	D24 (YEL)	D9 (ORG)
STB	ON	OFF	ON	OFF
ON	OFF	ON	∗1	∗2

∗1 : OFF at FAN is abnormal
∗2 : ON at access to HDD

3.21 FLKB(WYV/RB) ASSY

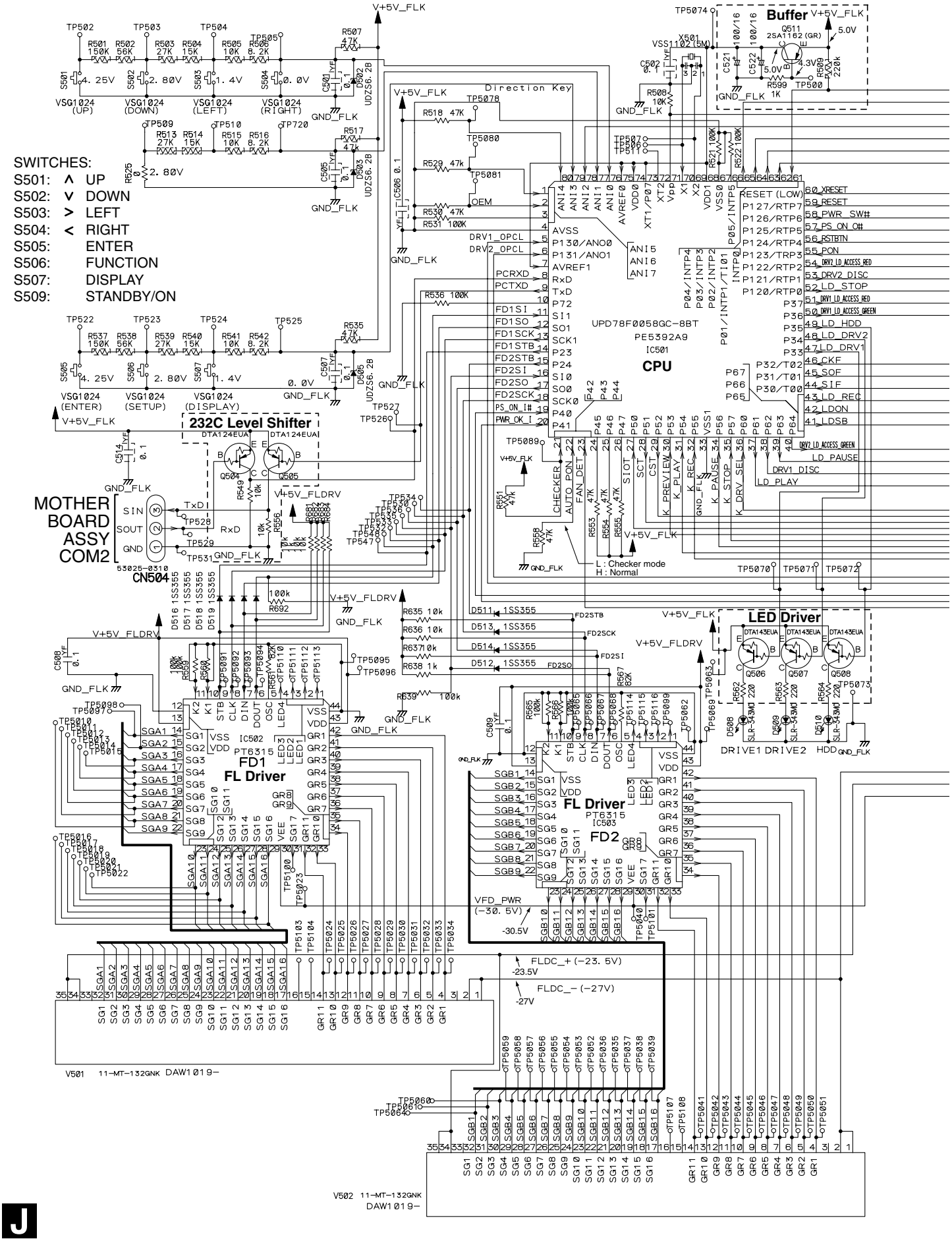

J FLKB(WYV/RB) ASSY (DWZ1164)

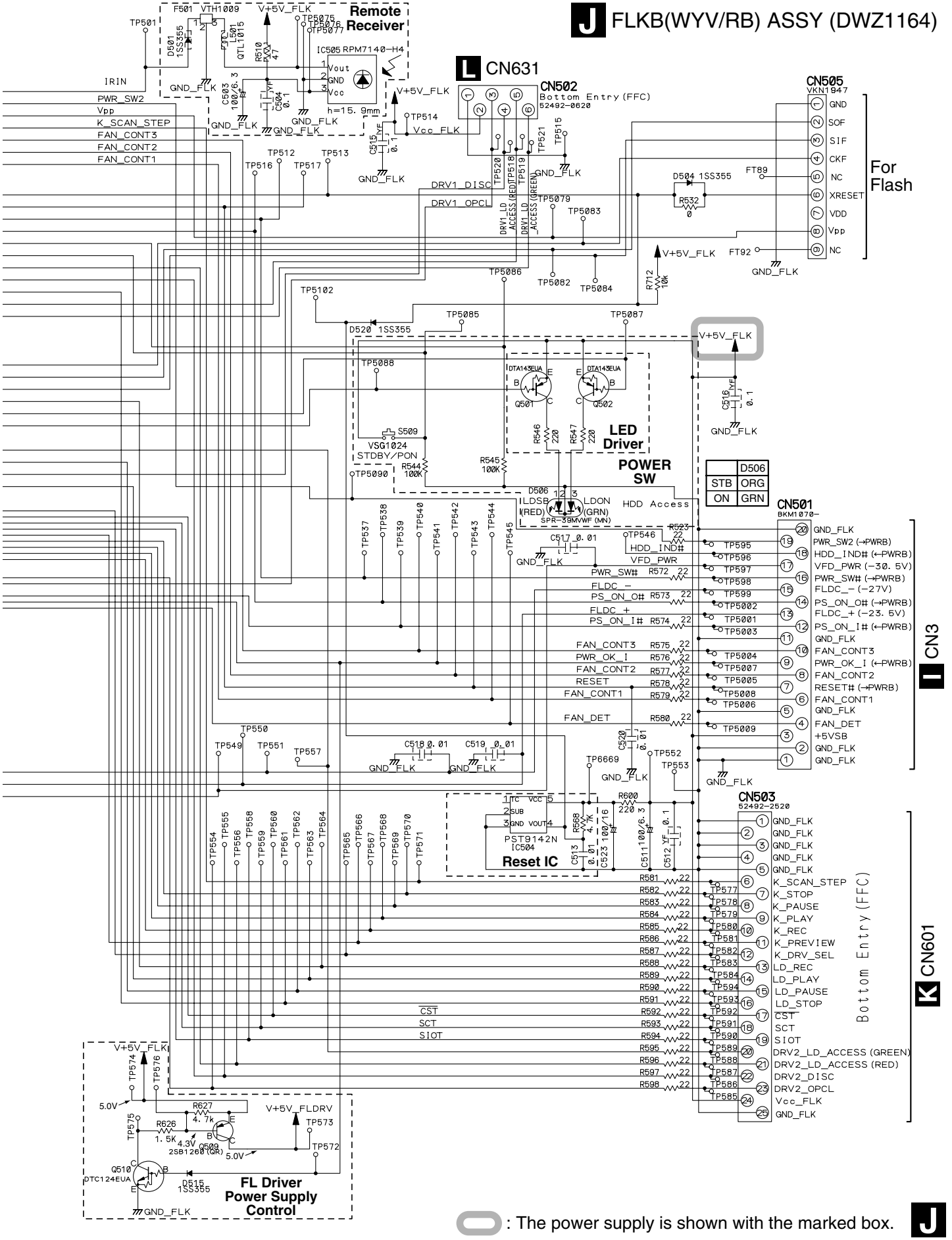

: The power supply is shown with the marked box.

3.22 KEYB(WYV/RB) ASSY

K KEYB(WYV/RB) ASSY (DWZ1157)

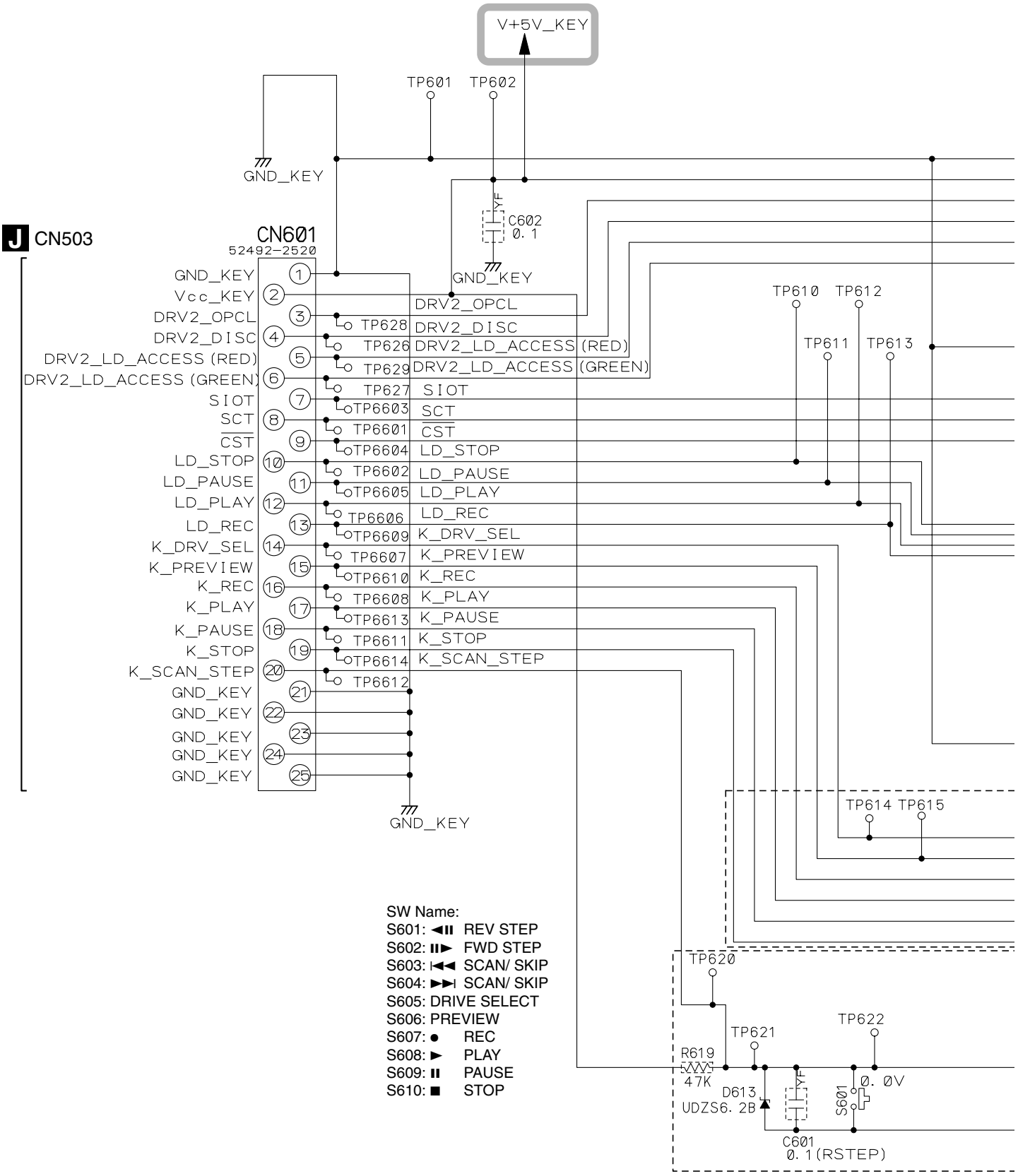

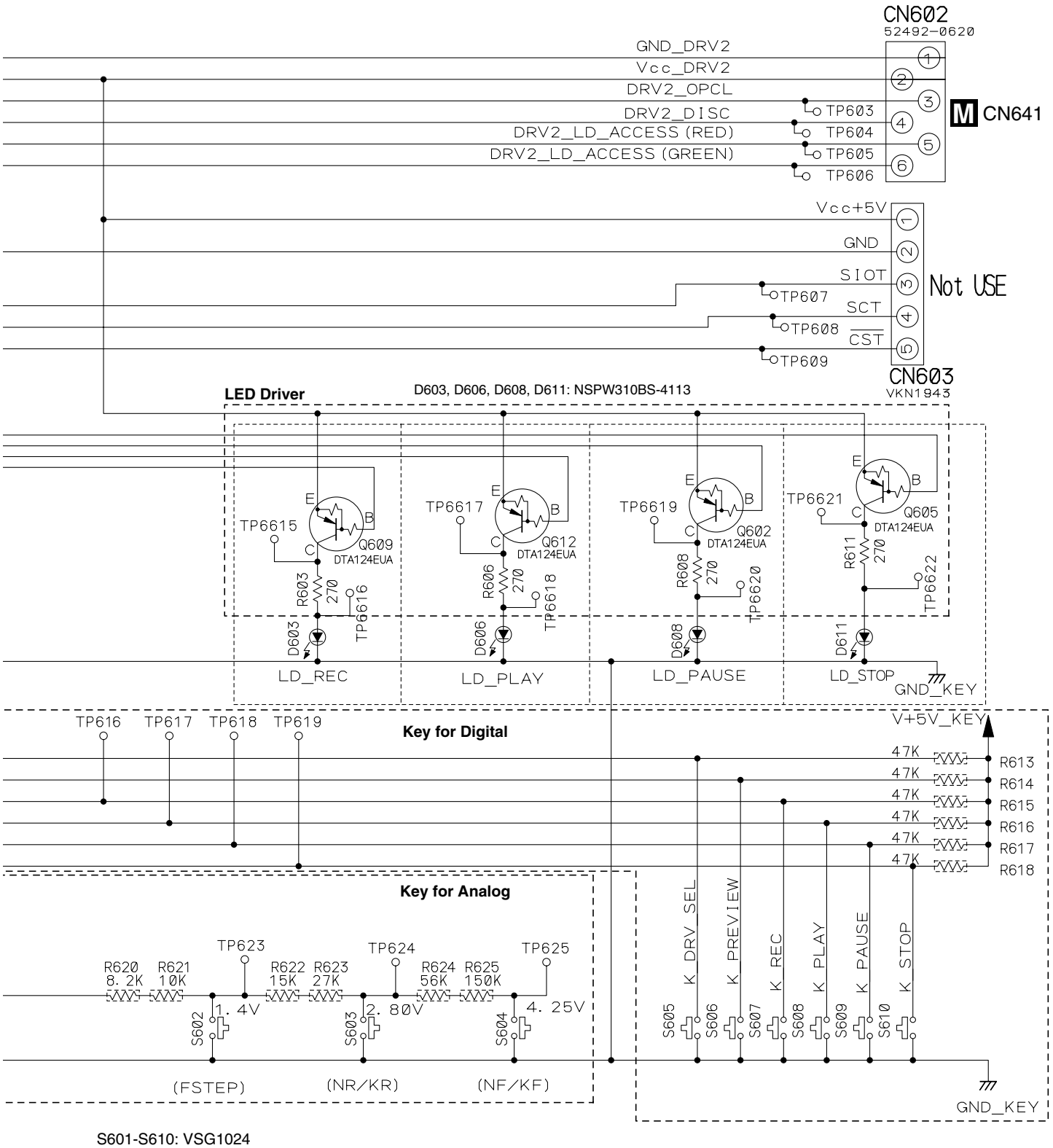

S601-S610: VSG1024

: The power supply is shown with the marked box.

3.23 DRV1B and DRV2B ASSYS

L DRV1B ASSY (DWZ1160)

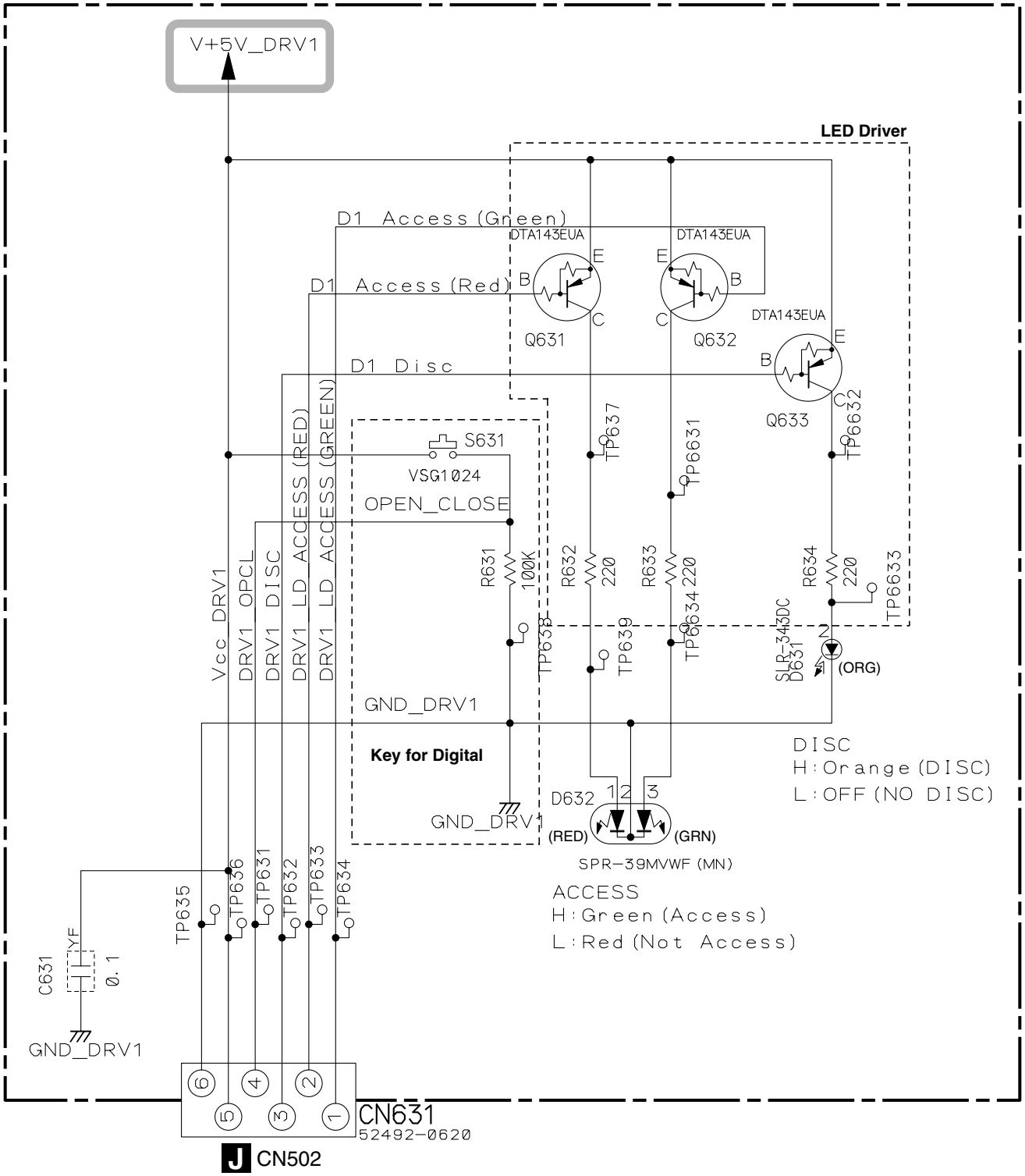

M DRV2B ASSY (DWZ1161)

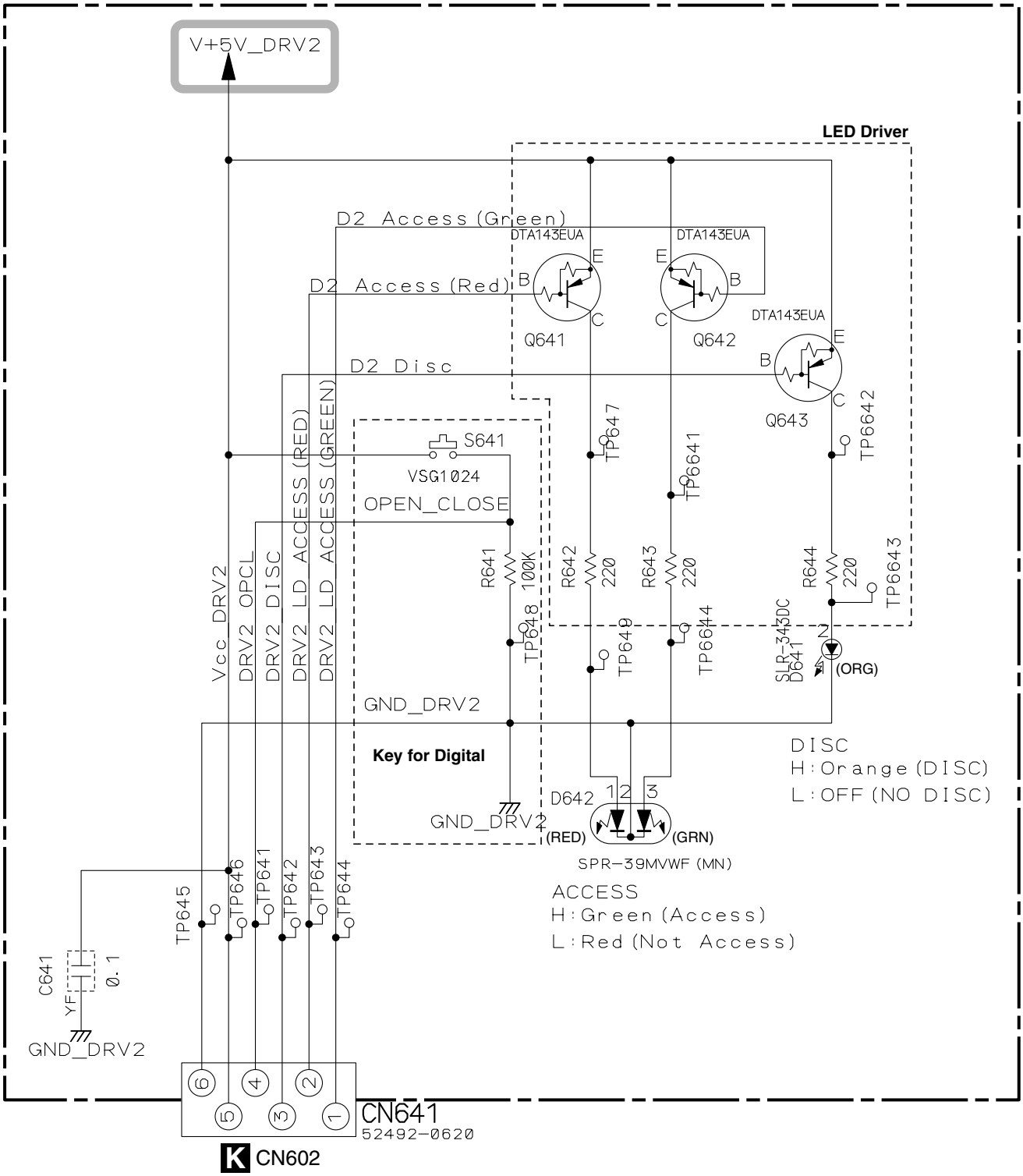

: The power supply is shown with the marked box. M

3.24 USBB ASSY

N USBB ASSY (DWZ1159)

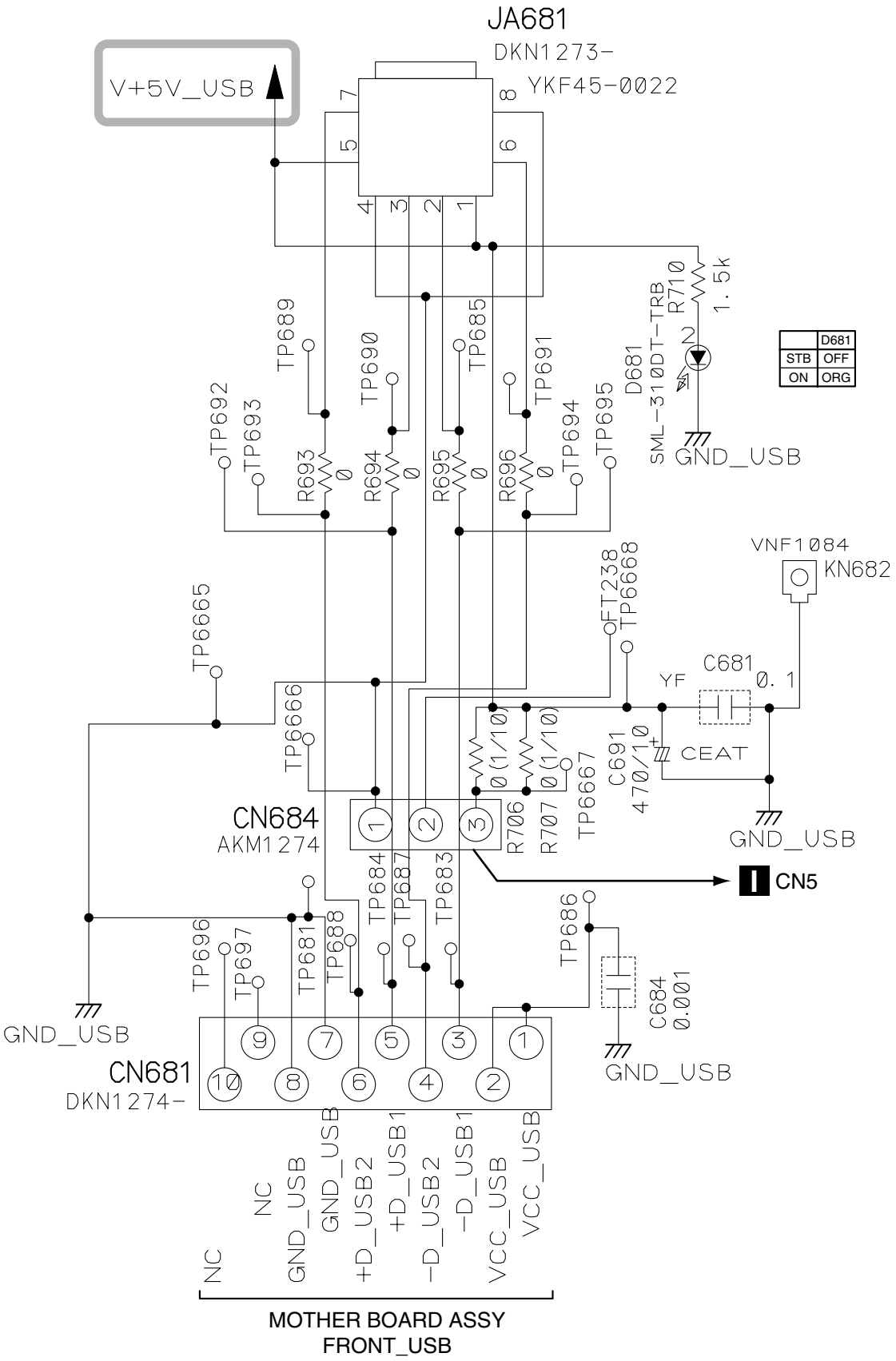

: The power supply is shown with the marked box.

N

4. PCB CONNECTION DIAGRAM

NOTE FOR PCB DIAGRAMS :

1. Part numbers in PCB diagrams match those in the schematic diagrams.
2. A comparison between the main parts of PCB and schematic diagrams is shown below.

Symbol In PCB Diagrams	Symbol In Schematic Diagrams	Part Name
B C E	B C E B C E	Transistor
B C E	B C E B C E	Transistor with resistor
D G S	D G S D G S	Field effect transistor
		Resistor array
		3-terminal regulator

3. The parts mounted on this PCB include all necessary parts for several destinations.
   For further information for respective destinations, be sure to check with the schematic diagram.
4. View point of PCB diagrams.

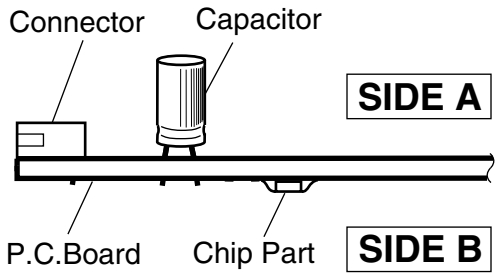

4.1 JKIB, JKDB, 422IB and HPVB ASSYS

SIDE A

A JKIB ASSY

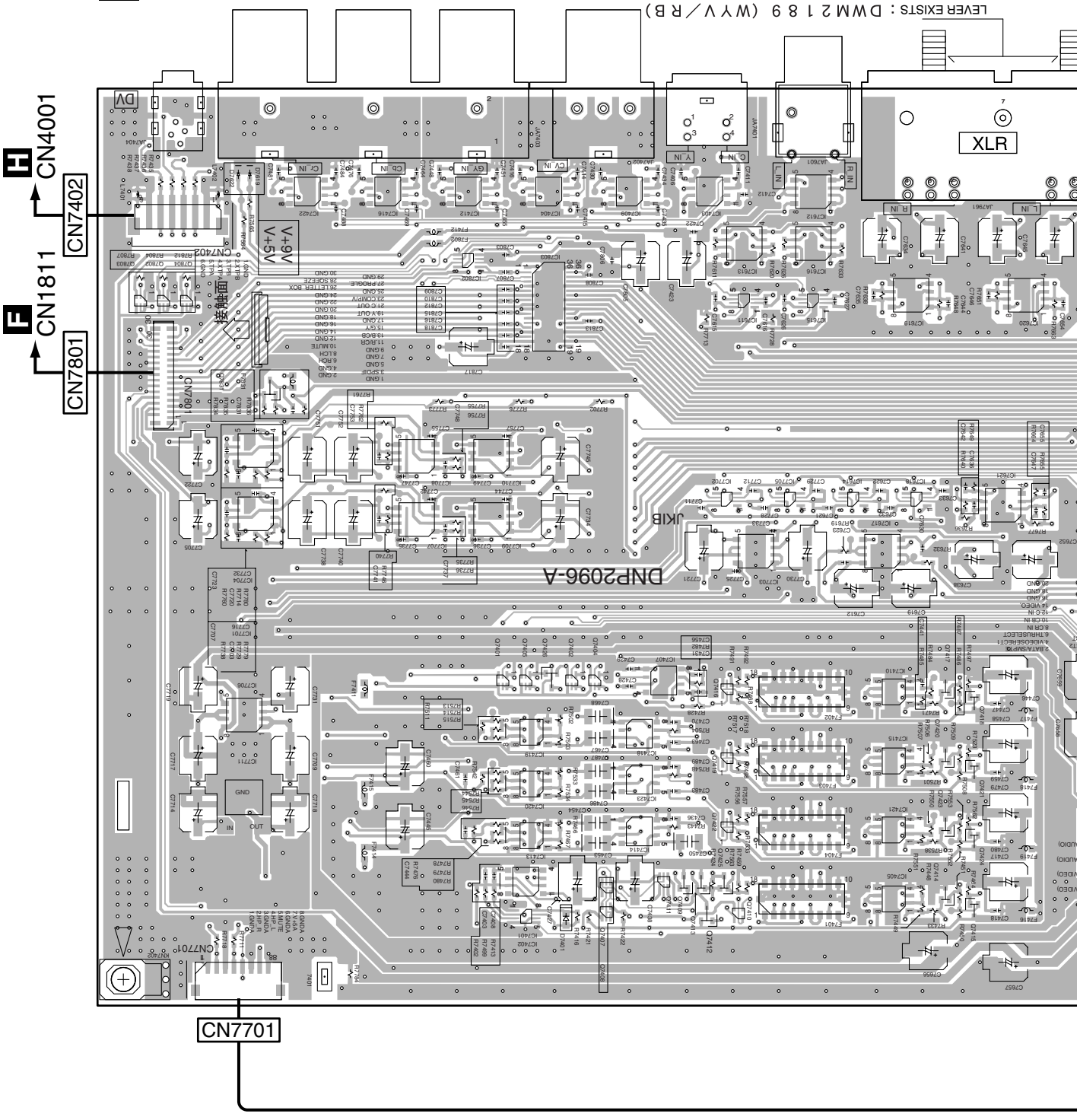

Q7802-Q7804 IC7422 IC7416 IC7412 IC7404 IC7409 IC7403 IC7612 IC7619 IC7620
Q7831 IC7802 IC7803 IC7613 IC7616
IC7704 IC7708 IC7710 IC7611 IC7615
IC7701 IC7707 IC7709 Q7426 IC7702 IC7705 IC7616 IC7618 IC7621
IC7711 Q7401 Q7405 Q7402 Q7404 IC7407 IC7703 IC7617
IC7419 IC7418 Q7416 IC7410 Q7417 Q7418
IC7420 IC7423 Q7419 IC7415 Q7420 Q7421
IC7413 IC7414 Q7422 IC7421 Q7423 Q7424
IC7401 Q7407 Q7425 IC7405 Q7414 Q7415
IC7402 Q7408 Q7409-Q7412

A

SIDE A

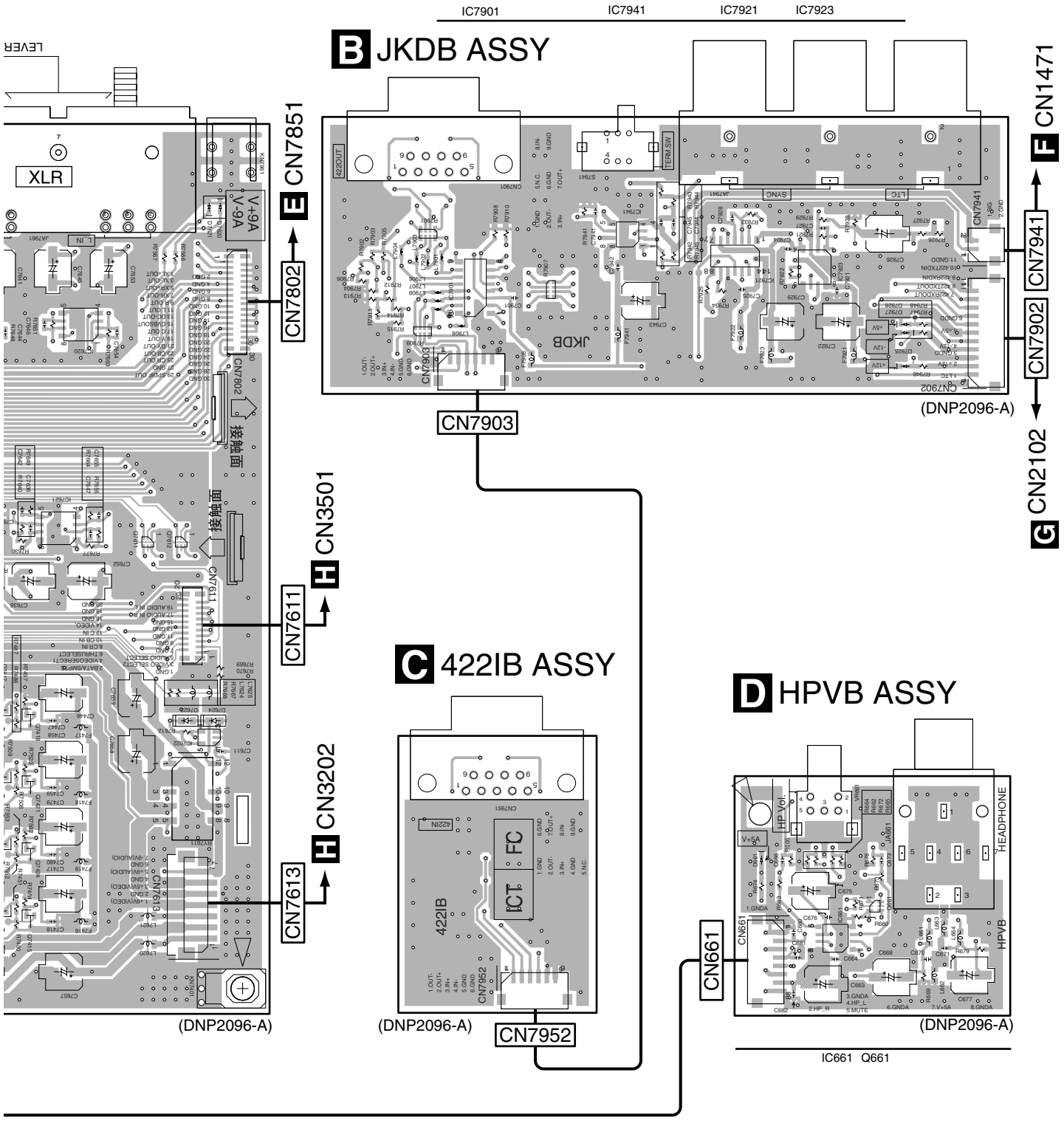
B JKDB ASSY
IC7901
IC7941
IC7921
IC7923
CN7851
CN7802
CN7903
CN1471
CN7941
CN7902
CN2102
(DNP2096-A)
C 422IB ASSY
CN7952
(DNP2096-A)
D HPVB ASSY
CN661
(DNP2096-A)
IC661 Q661
CN3501
CN7611
CN3202
CN7613
XLR
(DNP2096-A)
IC7620
IC7621
Q7611 Q7612
IC7622
Q7418
Q7421
Q7424
Q7415

SIDE B

B JKDB ASSY

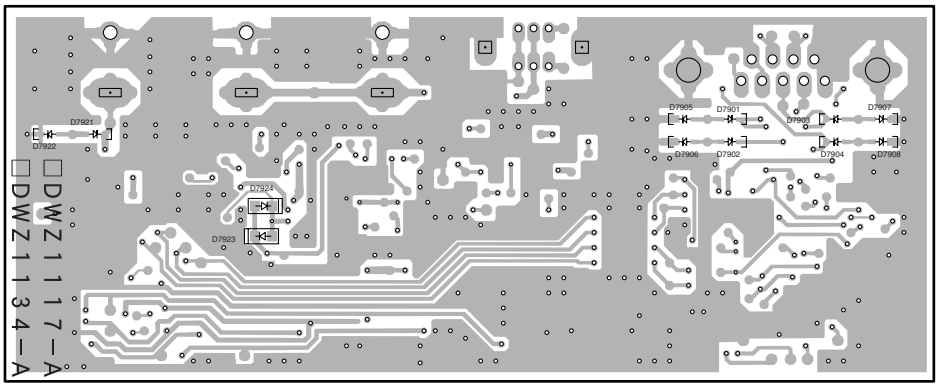

(DNP2096-A)

A JKIB ASSY

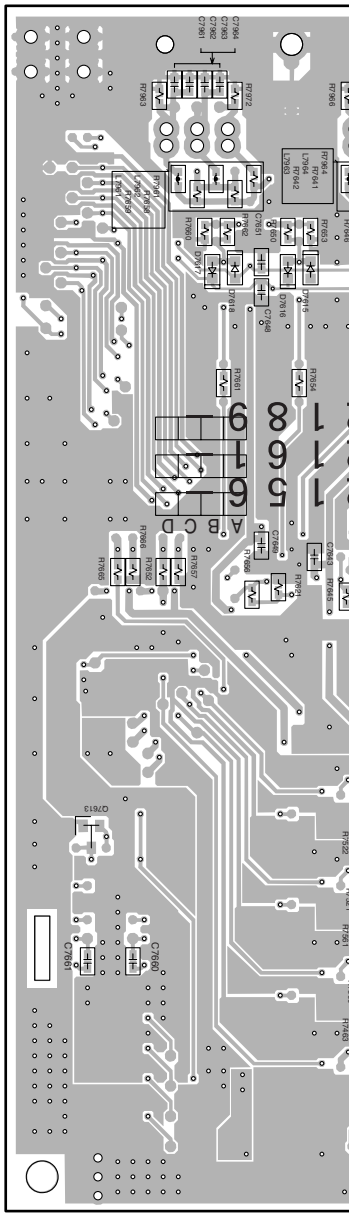

Q7613

D HPVB ASSY

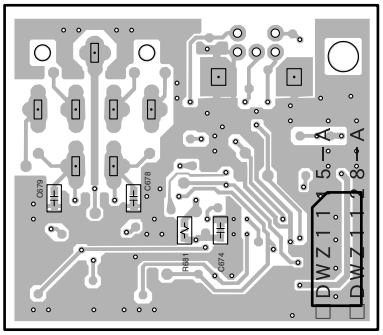

CN661

(DNP2096-A)

C 422IB ASSY

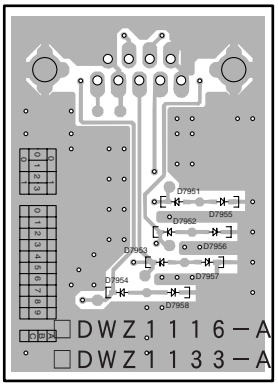

(DNP2096-A)

A B C D

SIDE B

ASSY

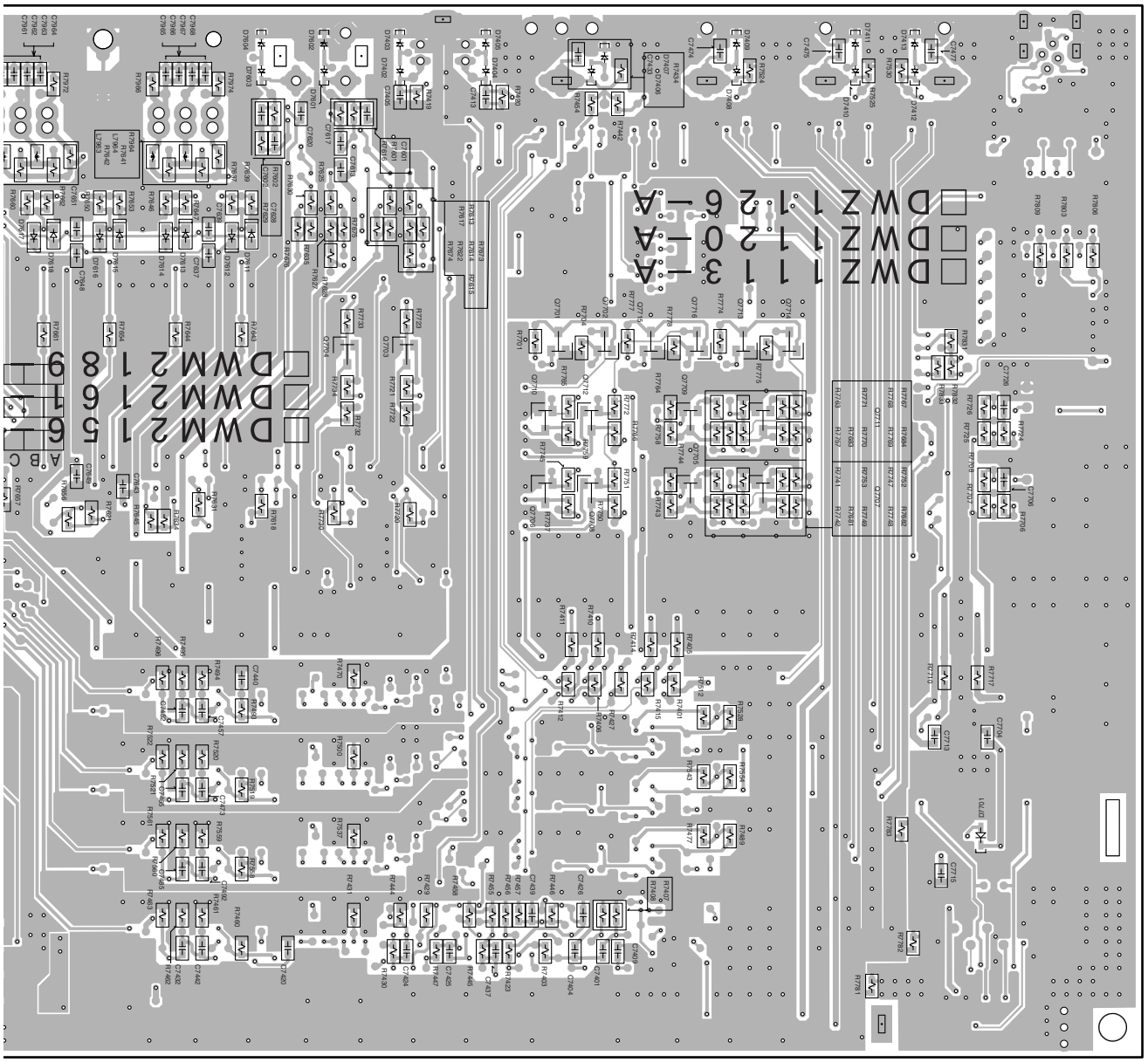

(DNP2096-A)

Q7704 Q7703 Q7701 Q7702 Q7715 Q7716 Q7713 Q7714
Q7710 Q7712 Q7709 Q7711
Q7706 Q7708 Q7705 Q7707

4.2 DECB ASSY

SIDE A

F DECB ASSY

SIDE A

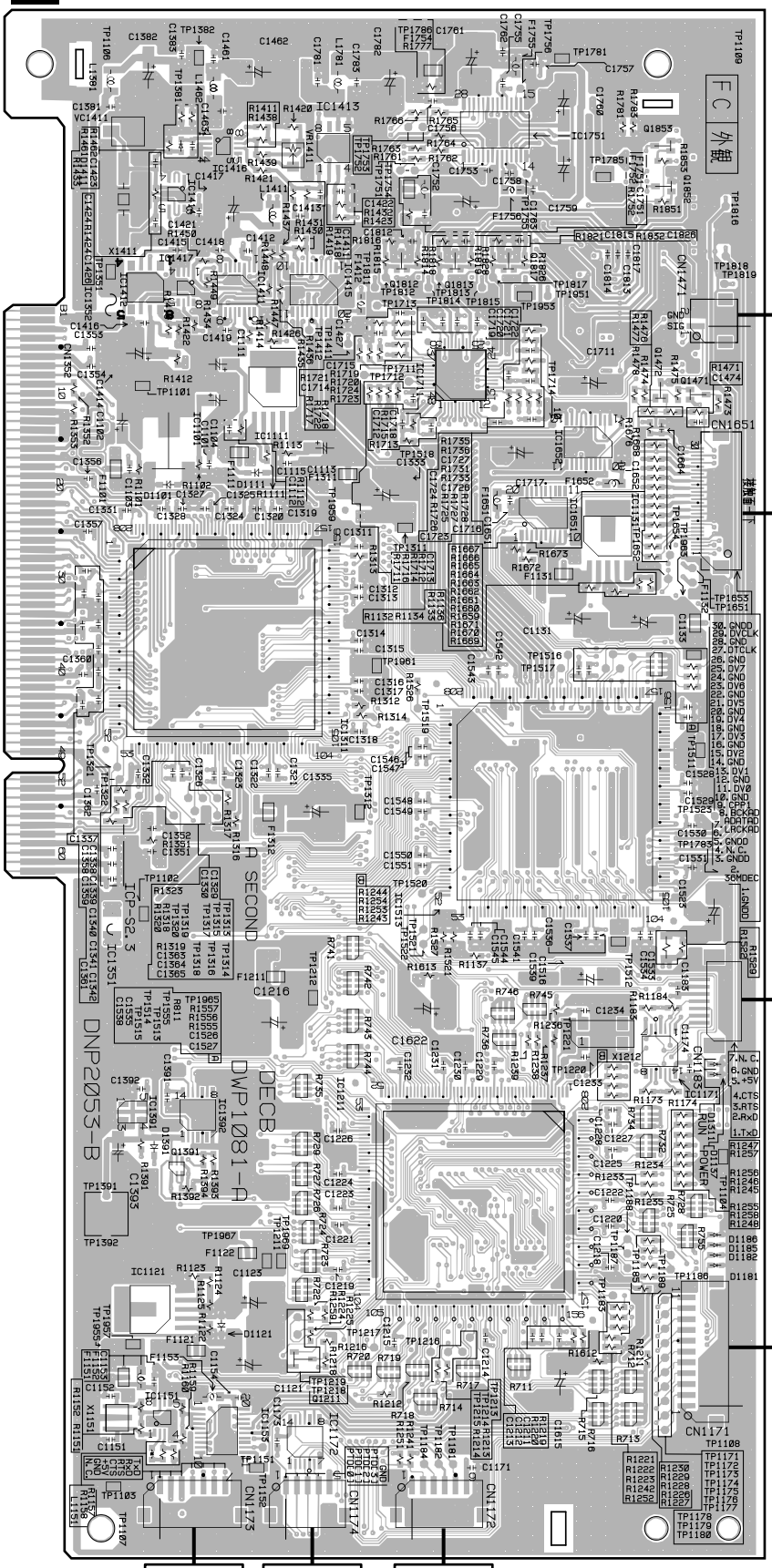

F **F**

SIDE B

F DECB ASSY

SIDE B

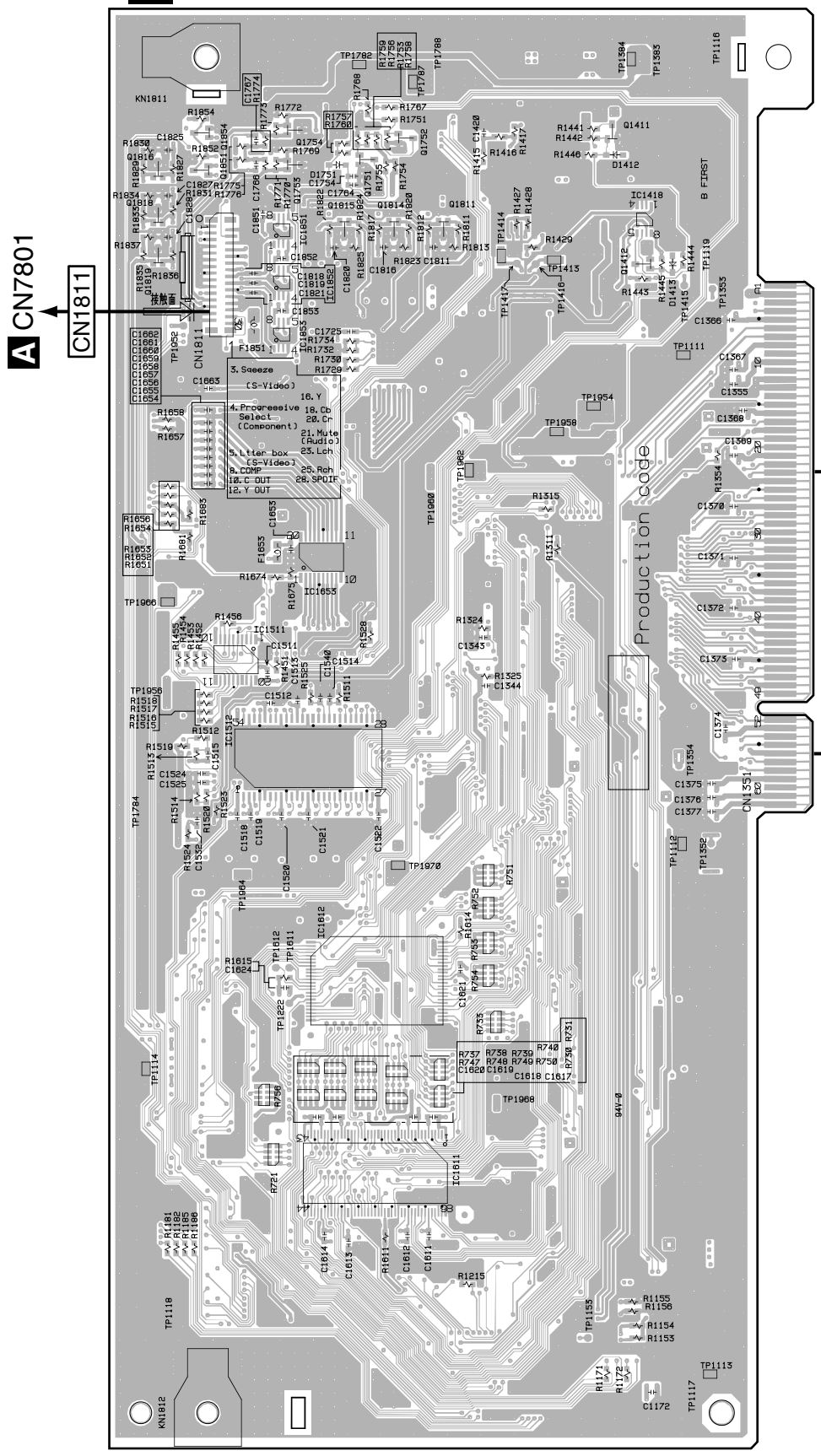

(DNP2053-B)

F F

4.3 PCIB ASSY

SIDE A

G PCIB ASSY

SIDE A

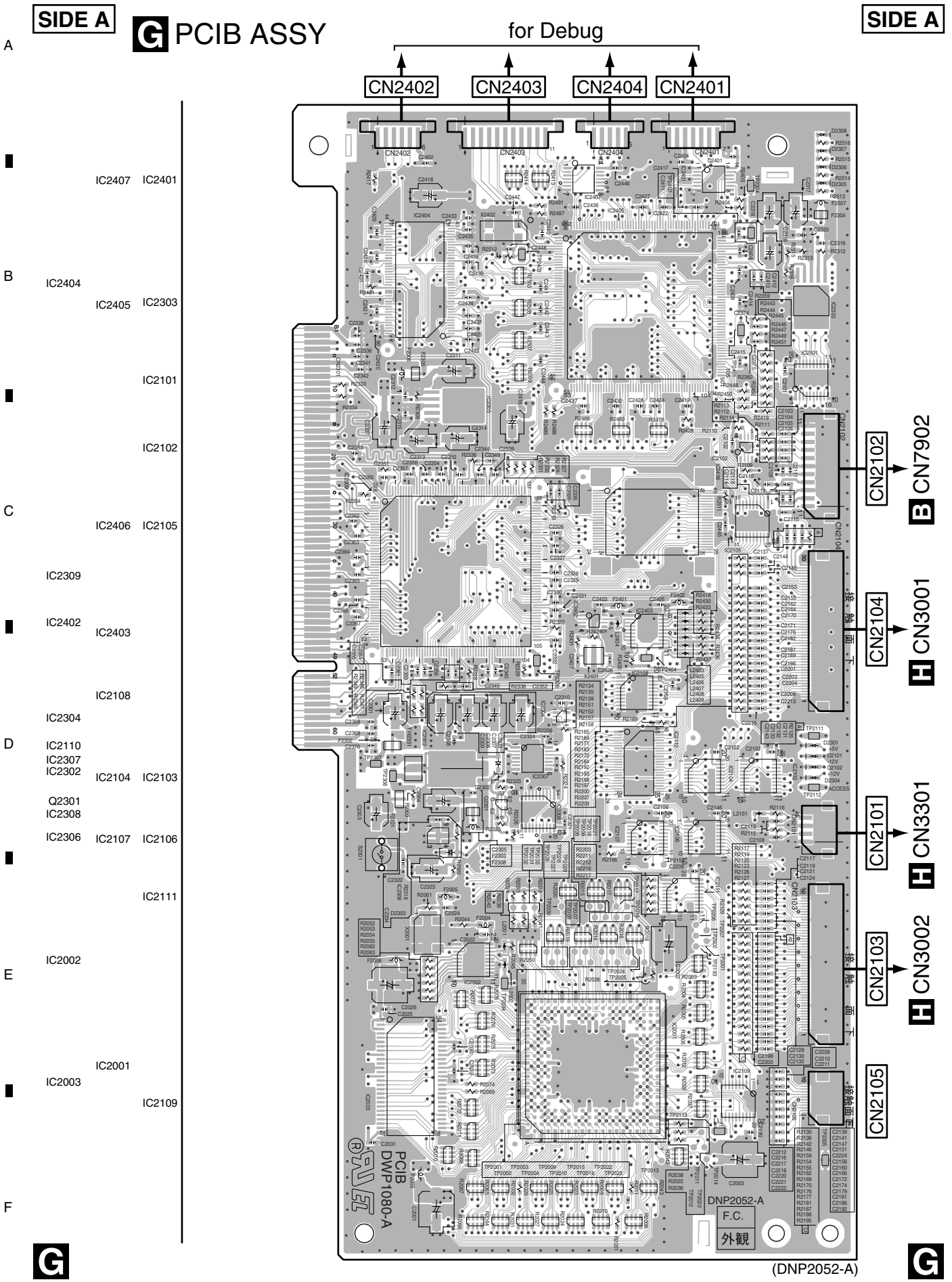

(DNP2052-A)

G G

SIDE B

SIDE B

G PCIB ASSY

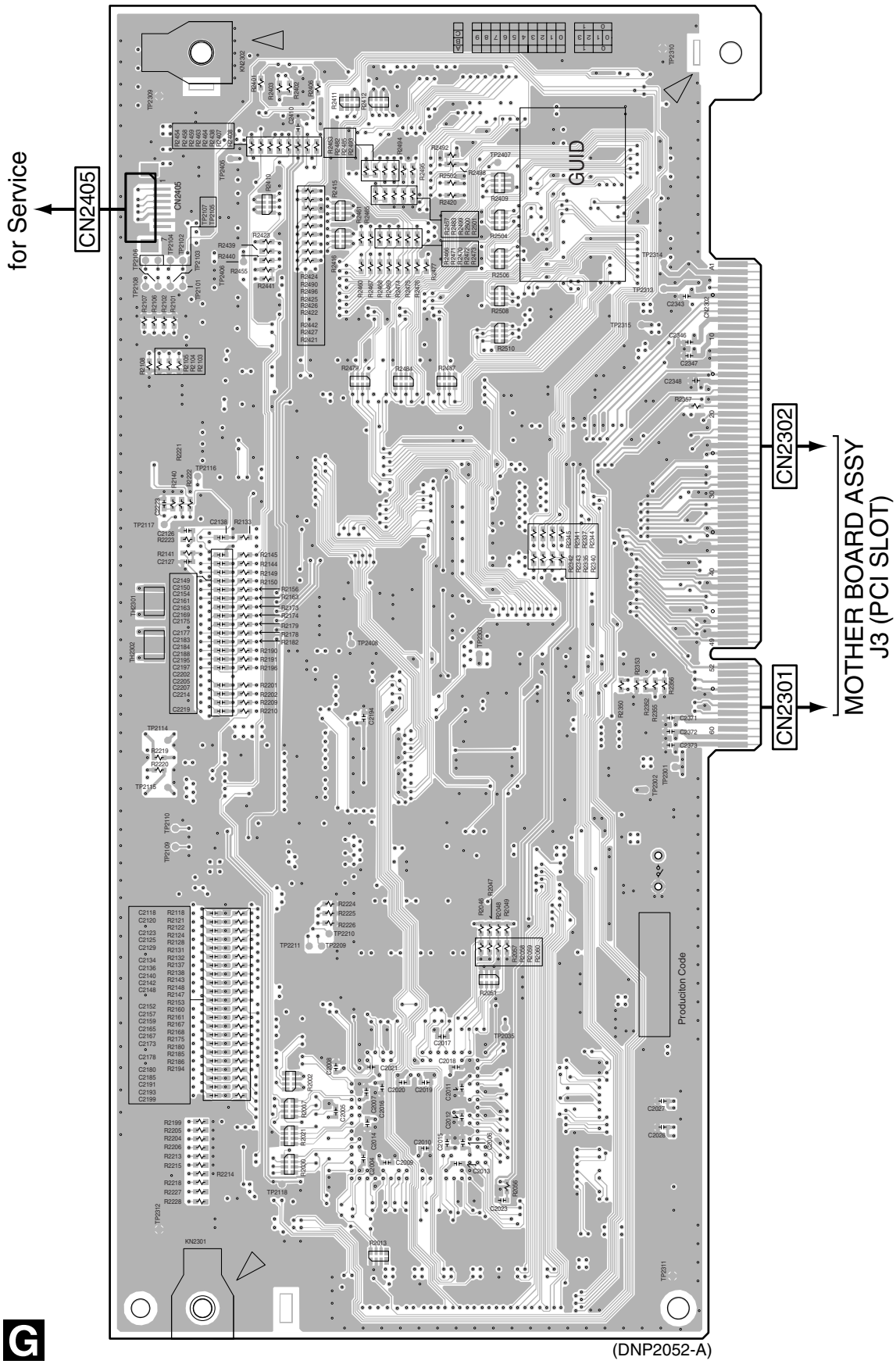

4.4 AVIB ASSY

SIDE A

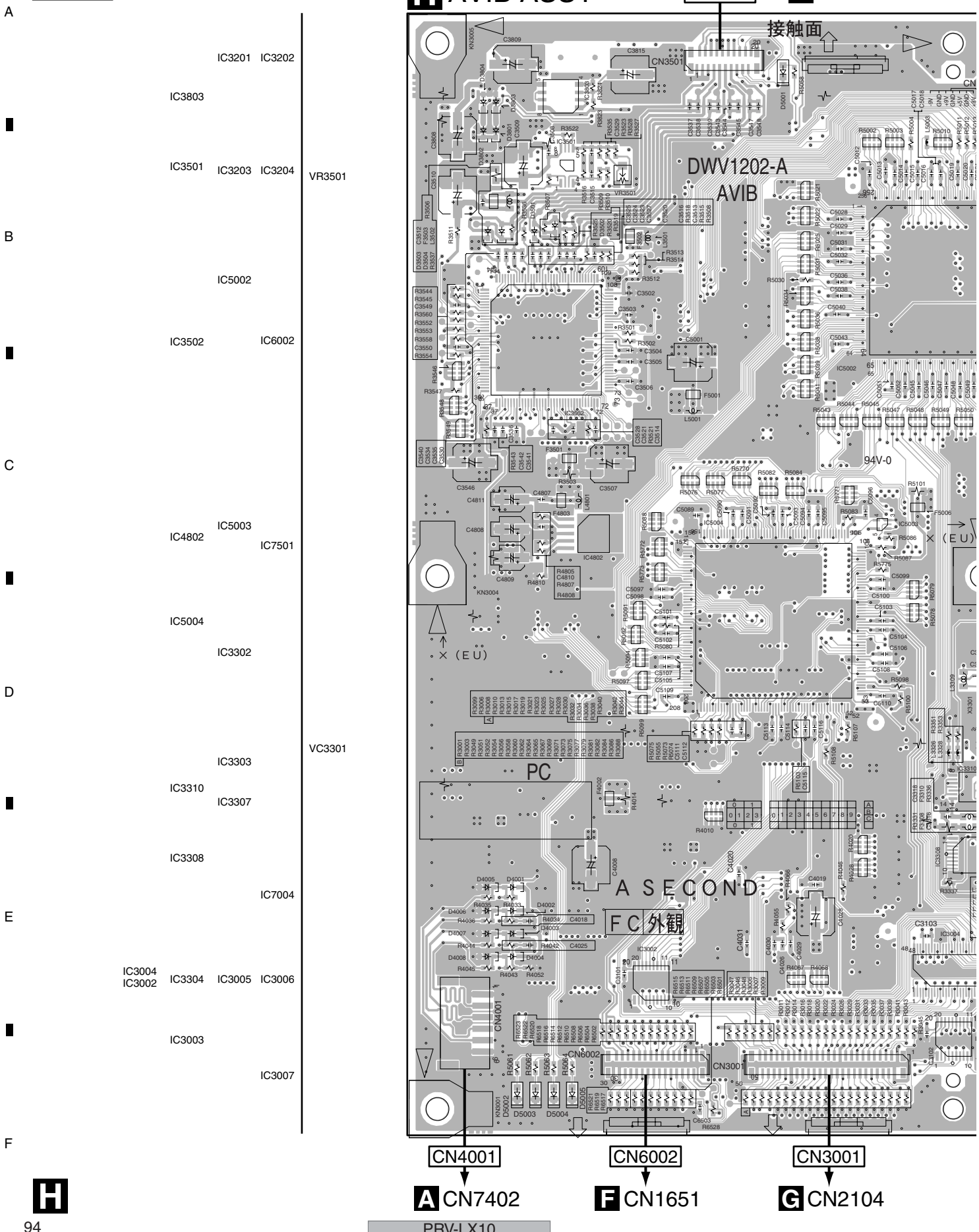

611 CN3202 → A CN7613 CN3201 → I CN2

SIDE A

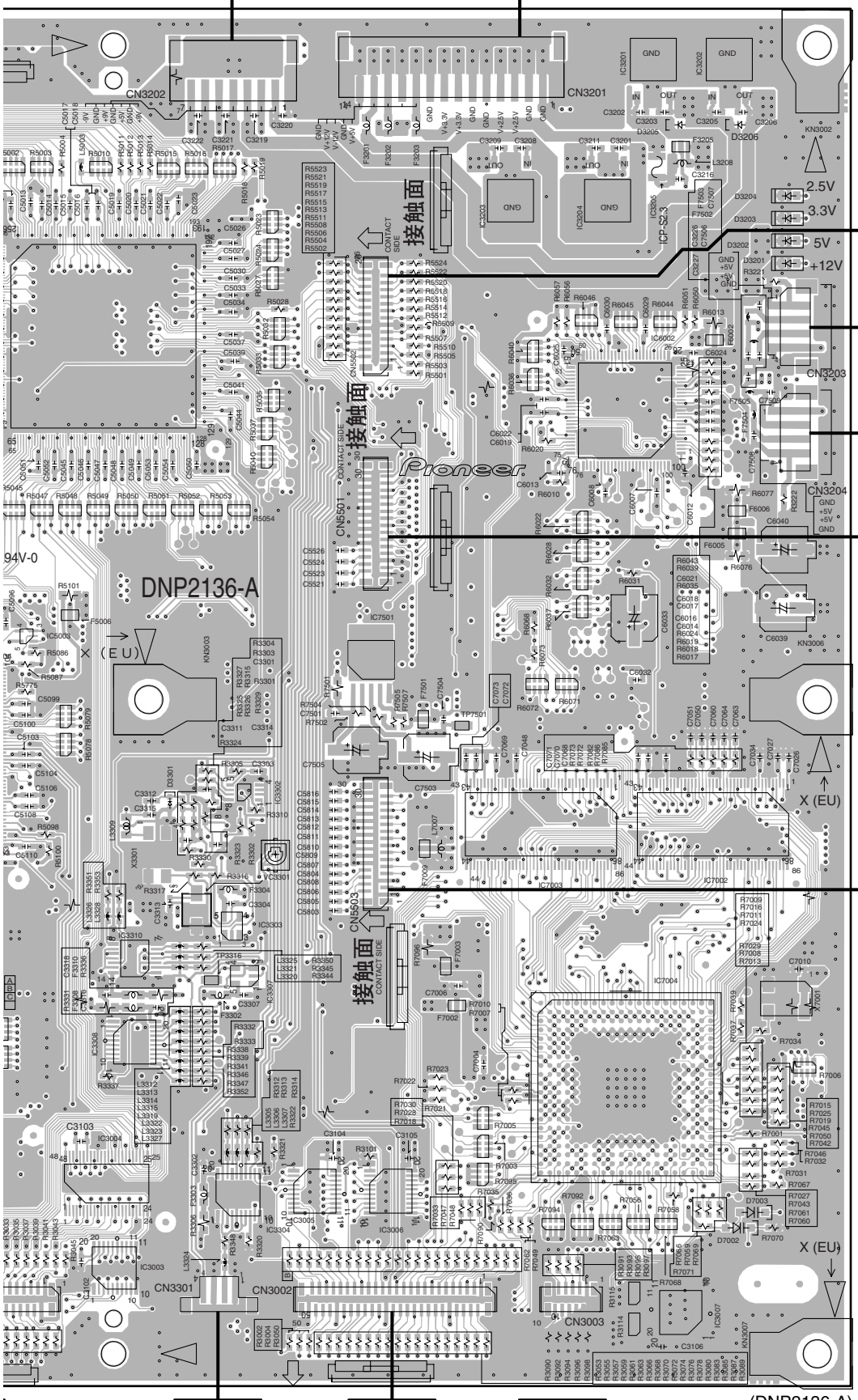

A B C D E F

94V-0

CN3301 CN3002 CN3003

604 G CN2101 G CN2103

H

SIDE B

H AVIB ASSY

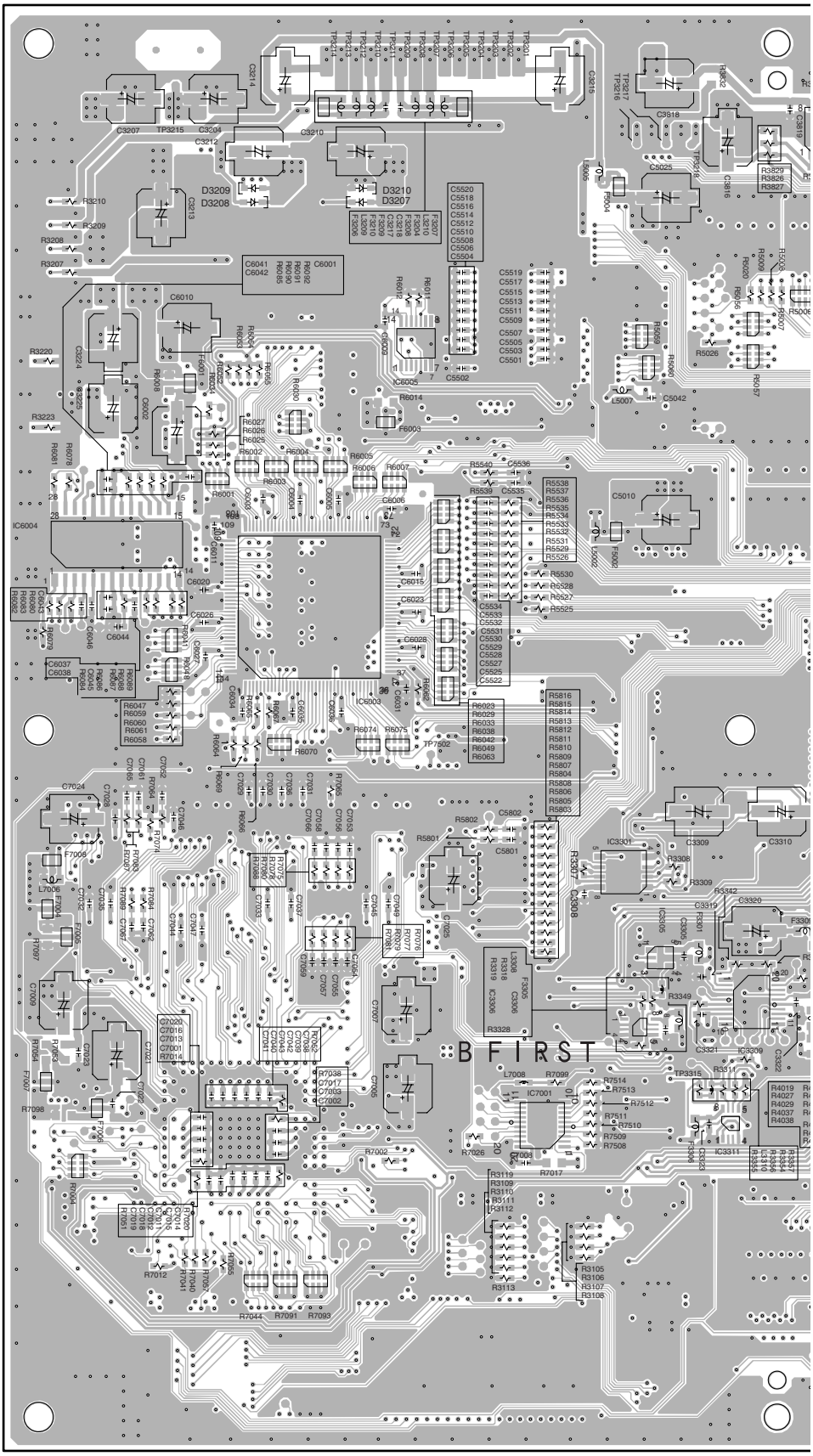

SIDE B

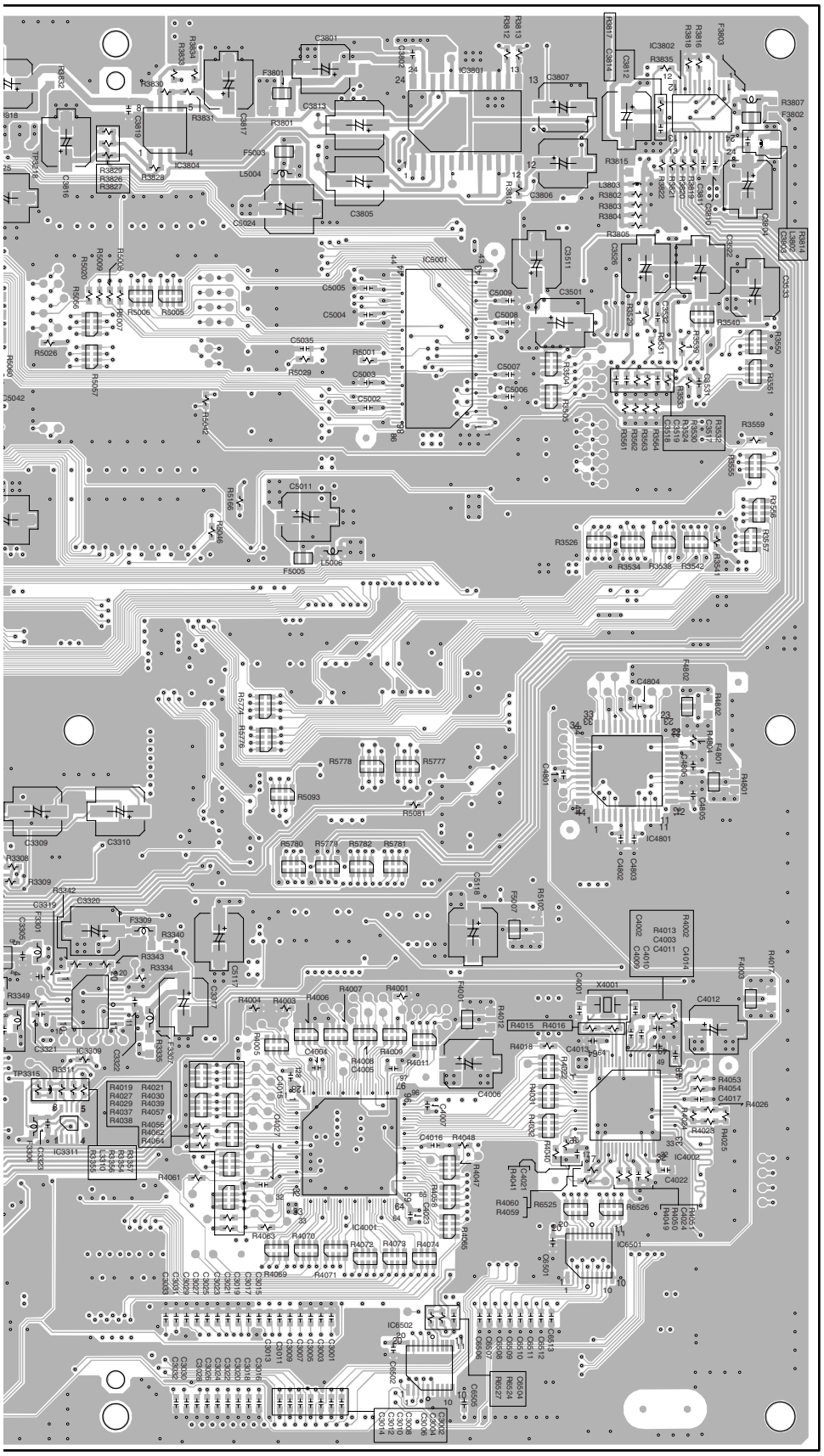

IC3804 IC3801 IC3802

IC6005 IC5001

IC6004

IC6003

IC4801

IC3301

IC3305

IC3309

IC3306

IC4002

IC7001 IC3311

IC4001

IC6501

IC6502

(DNP2136-A)

4.5 PWRB ASSY

SIDE A

SIDE A

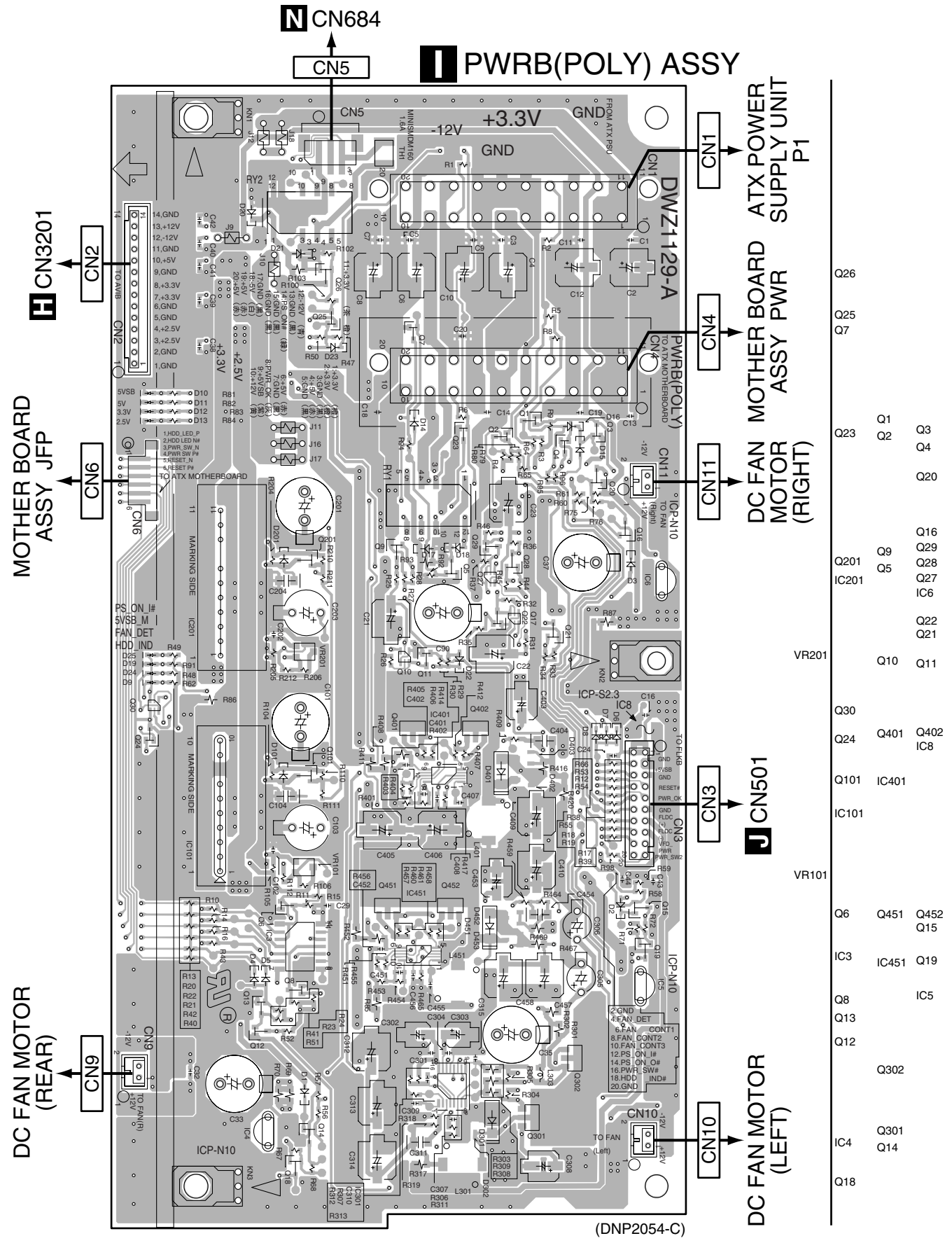

SIDE B

PWRB(POLY) ASSY

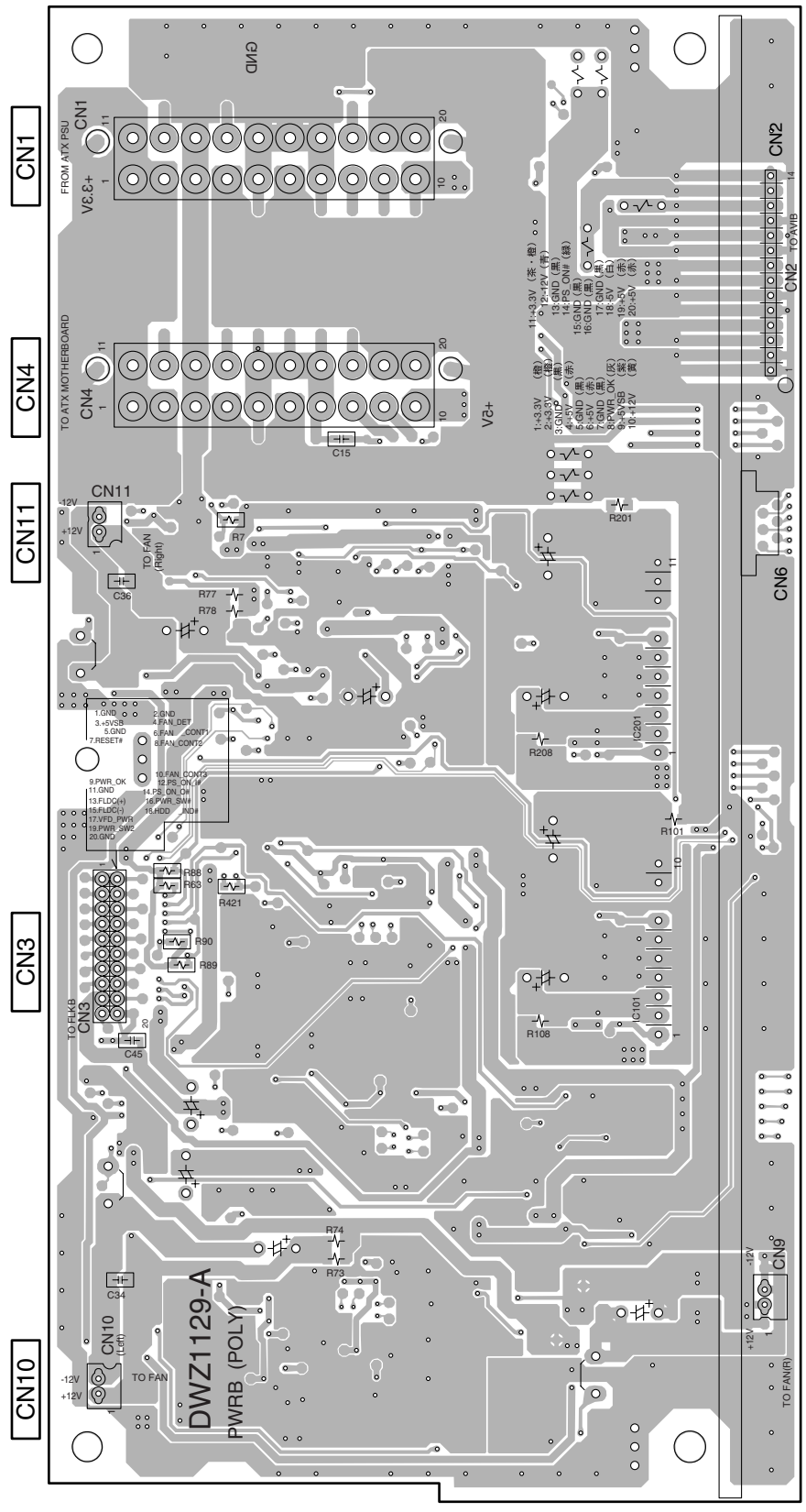

(DNP2054-C)

4.6 FLKB, KEYB, DRV1B, DRV2B and USBB ASSYS

SIDE A

K KEYB(WYV/RB) ASSY

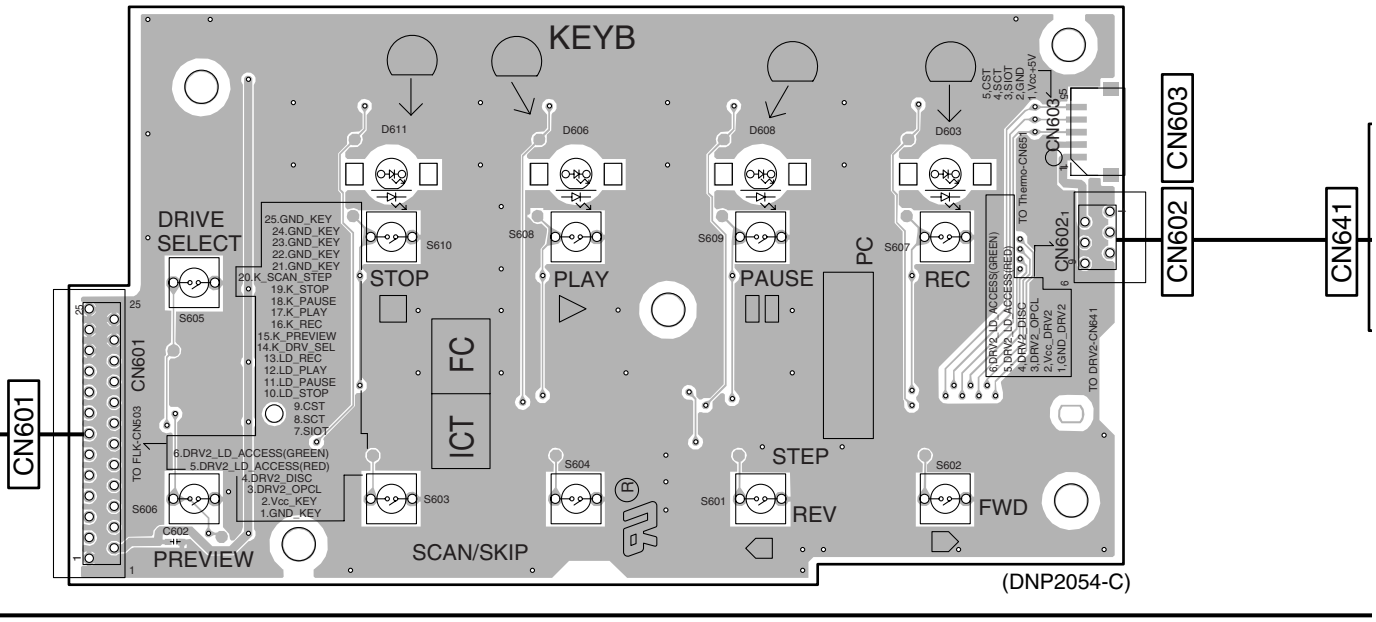

J FLKB(WYV/RB) ASSY

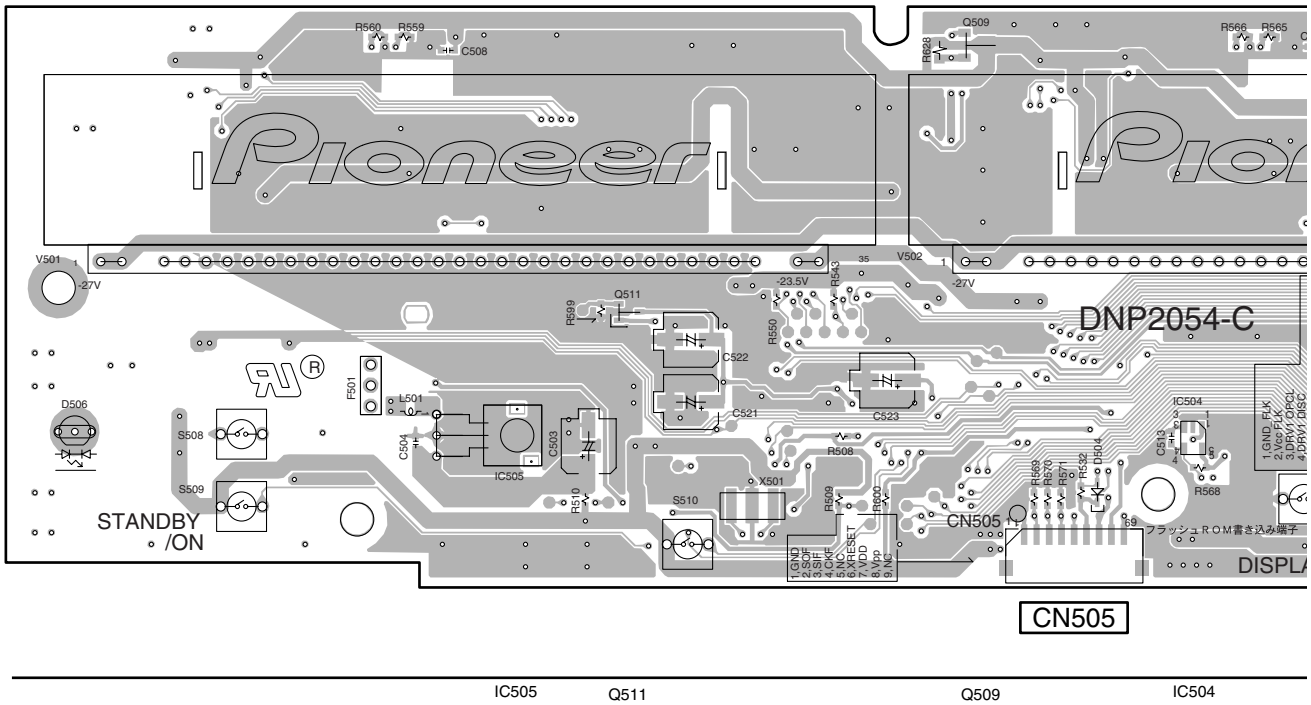

J K

SIDE A

N USBB ASSY

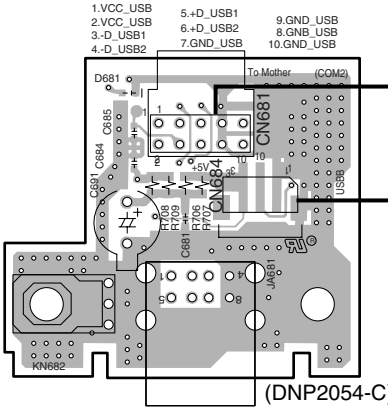

MOTHER BOARD ASSY FRONT_USB

CN681

CN684

I CN5

M DRV2B ASSY

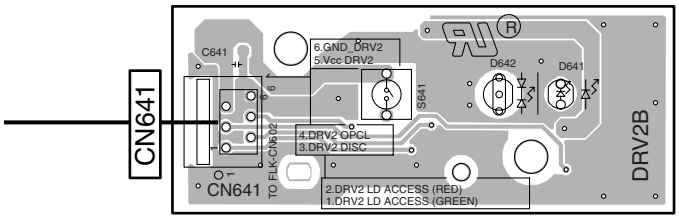

(DNP2054-C)

(DNP2054-C)

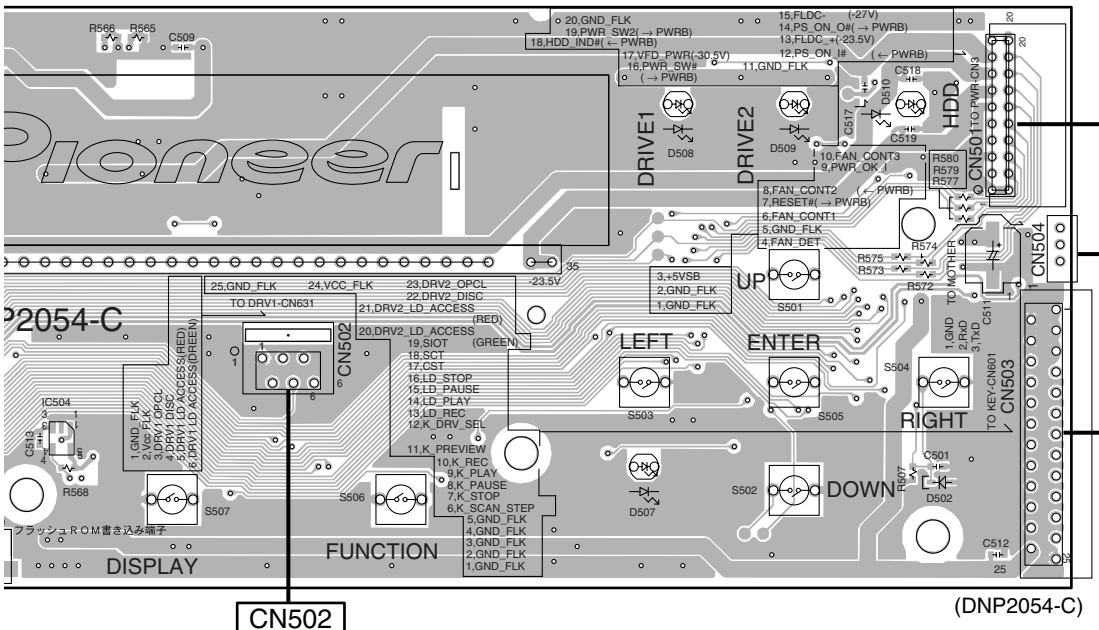

CN3

MOTHER BOARD ASSY COM2

(DNP2054-C)

CN502

IC504

L DRV1B ASSY

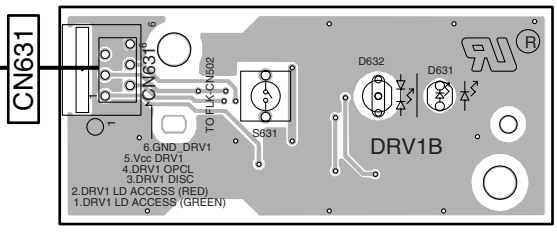

(DNP2054-C)

J L M N

SIDE B

N USBB ASSY

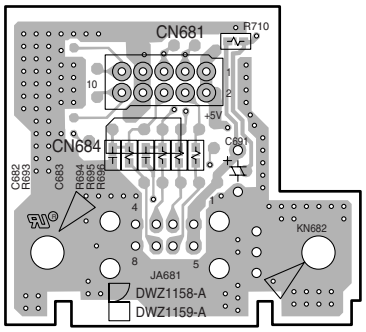

(DNP2054-C)

M DRV2B ASSY

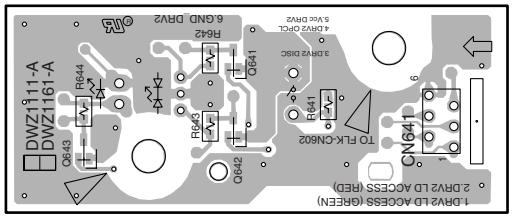

(DNP2054-C)

Q643 Q641 Q642

CN681 CN684 CN641

J FLKB(WYV/RB) ASSY

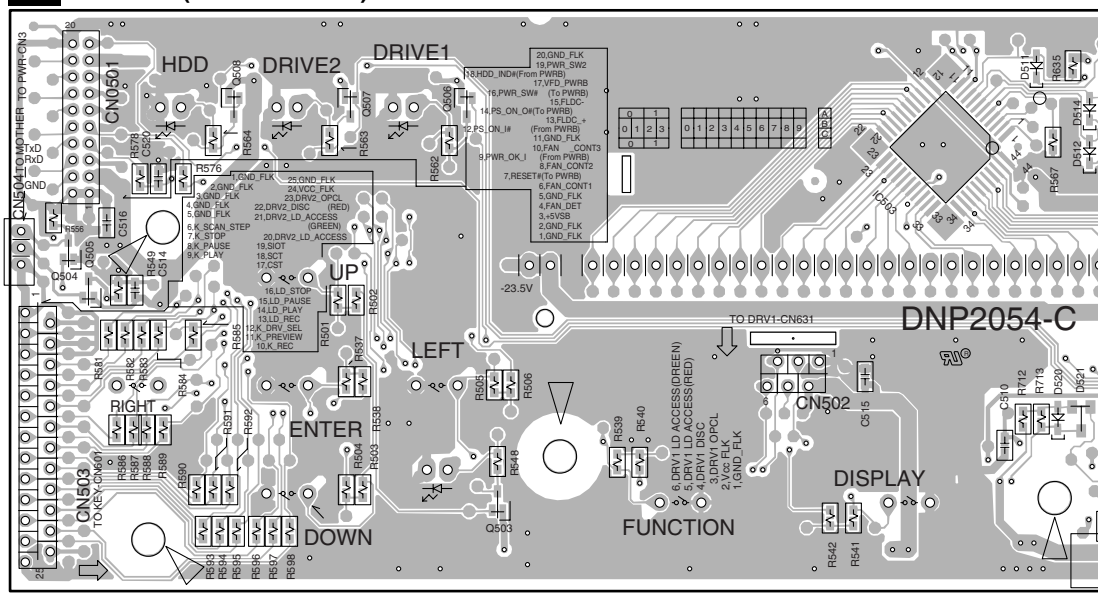

CN501 CN504 CN503 CN502

Q505 Q504 Q508 Q507 Q506 Q503 IC503

L DRV1B ASSY

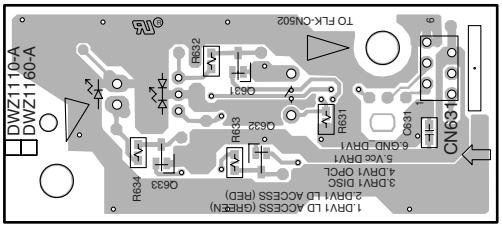

(DNP2054-C)

Q631 Q633 Q632

CN631

J L M N

SIDE B

Q609 Q602 Q612 Q605

K KEYB(WYV/RB) ASSY

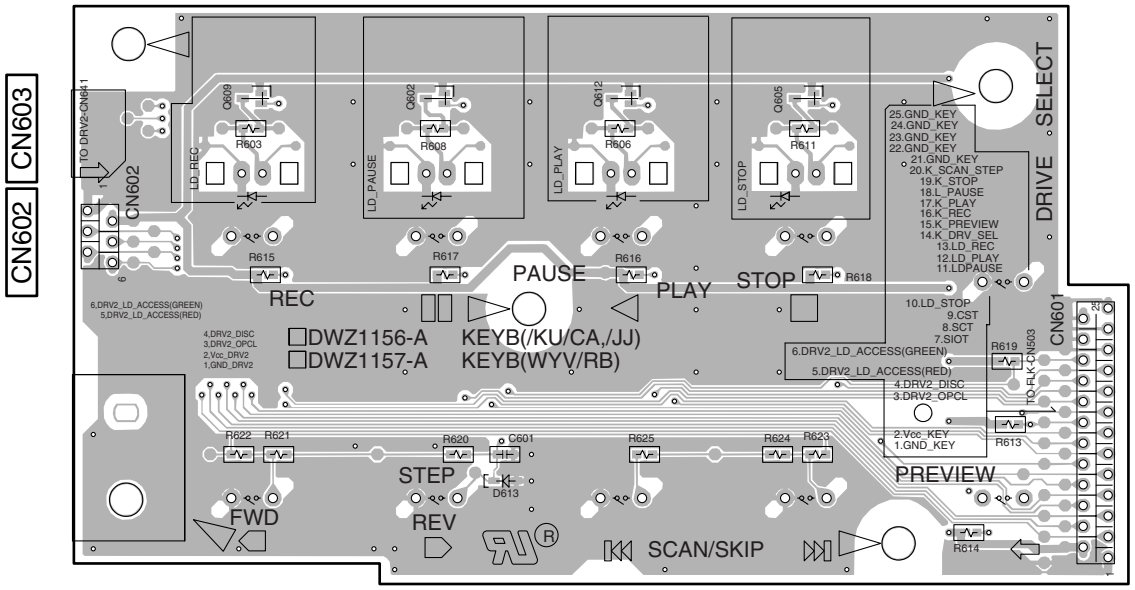

(DNP2054-C)

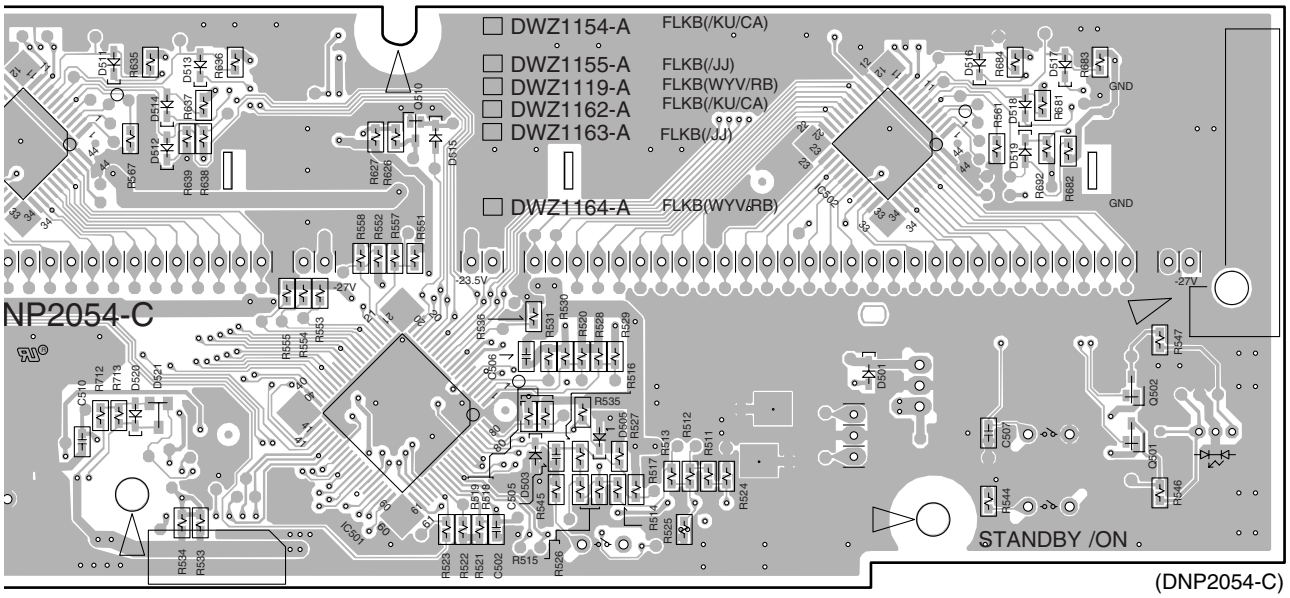

(DNP2054-C)

4.7 JKOB ASSY

SIDE A

SIDE B

E JKOB ASSY

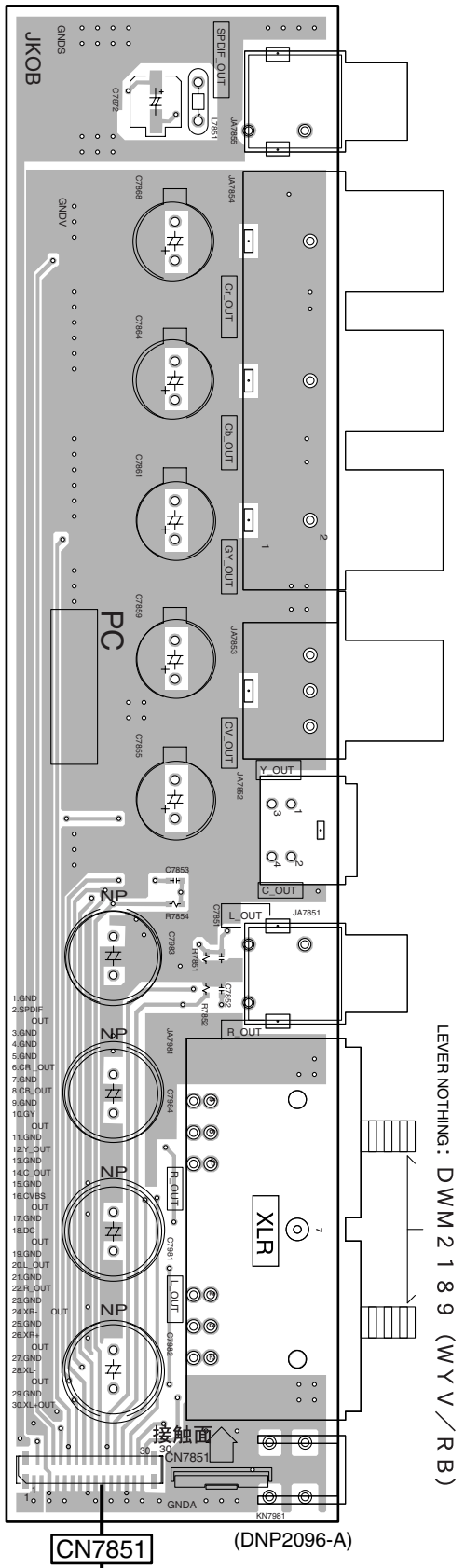

LEVER NOTHING : DWM2189 (WYV/RB)

(DNP2096-A)

CN7851

E **A** CN7802

E JKOB ASSY

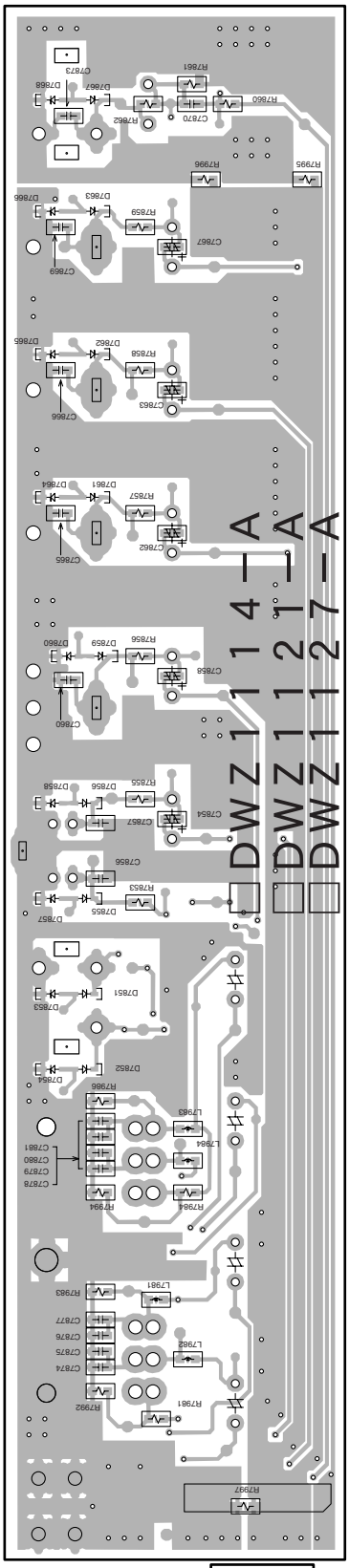

(DNP2096-A)

CN7851

E

4.8 MOTHER BOARD ASSY

Connection Diagram of the MOTHER BOARD ASSY

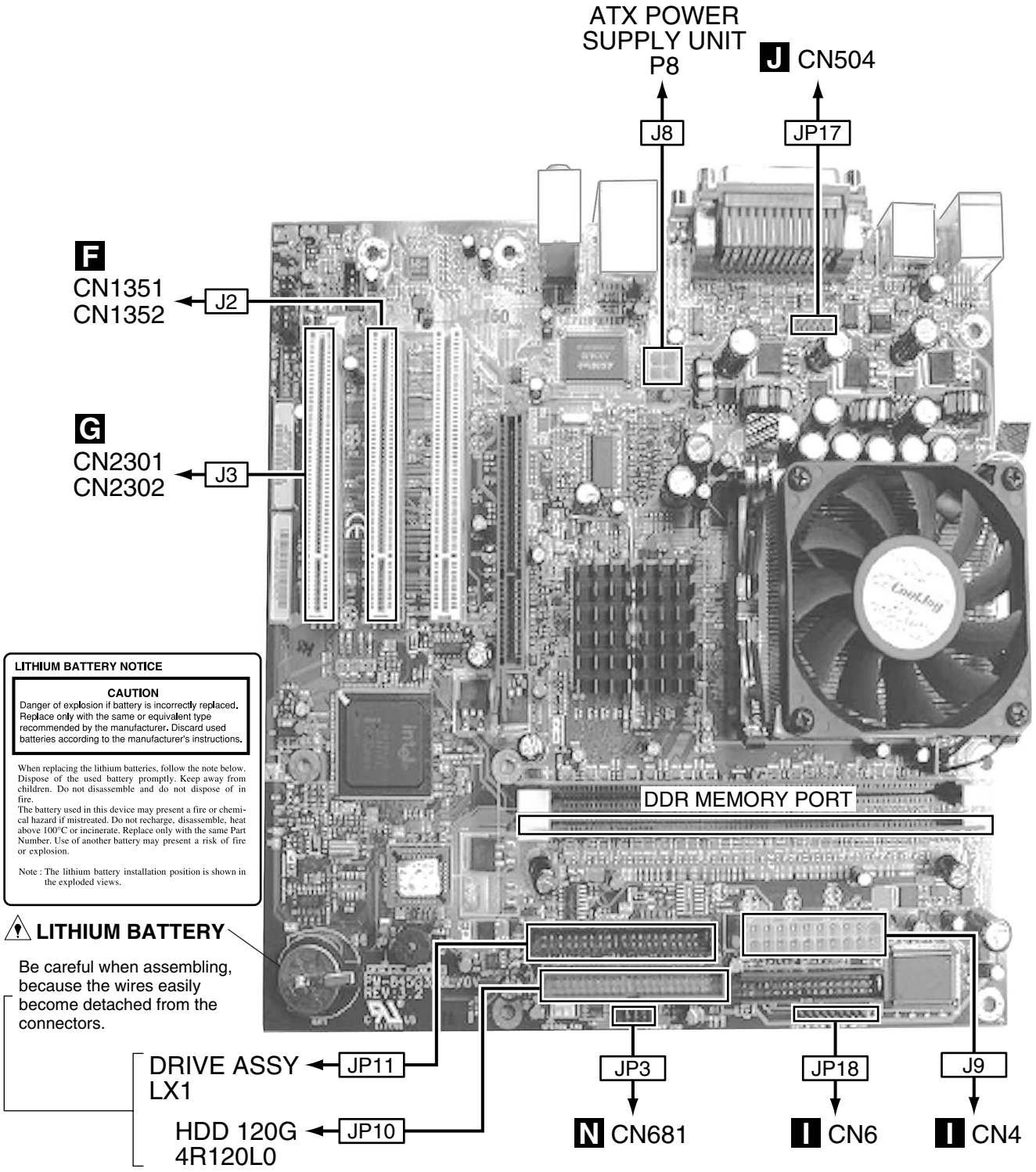

J8 (DKP3656): For CPU_12 V.
The connector has a different shape to prevent erroneous connection.
J9 (DKP3657): For ATX power supply.
The connector has a different shape to prevent erroneous connection.
JP3 (DKP3646): For USB.
The black tube is attached to the cable on the side of the Motherboard.
The connector is designed to prevent erroneous connection to a 9-pin connector.
JP10 (DKP3647): For the IDE Primary (HDD).
The connector has a different shape to prevent erroneous connection.
JP11 (DKP3648): For the IDE Secondary (DVD drive).
The connector has a different shape to prevent erroneous connection.
JP17 (DKP3645): For COM2.
To prevent erroneous connection to a 10-pin connector, some of the pin holes are filled.
JP18 (DKP3635): For FPIO.
Be careful of the direction. Align the white mark with Pin 1.
Make sure that the cable is not twisted after connection.

Notes on the Connectors Mounted on the MOTHER BOARD Assy

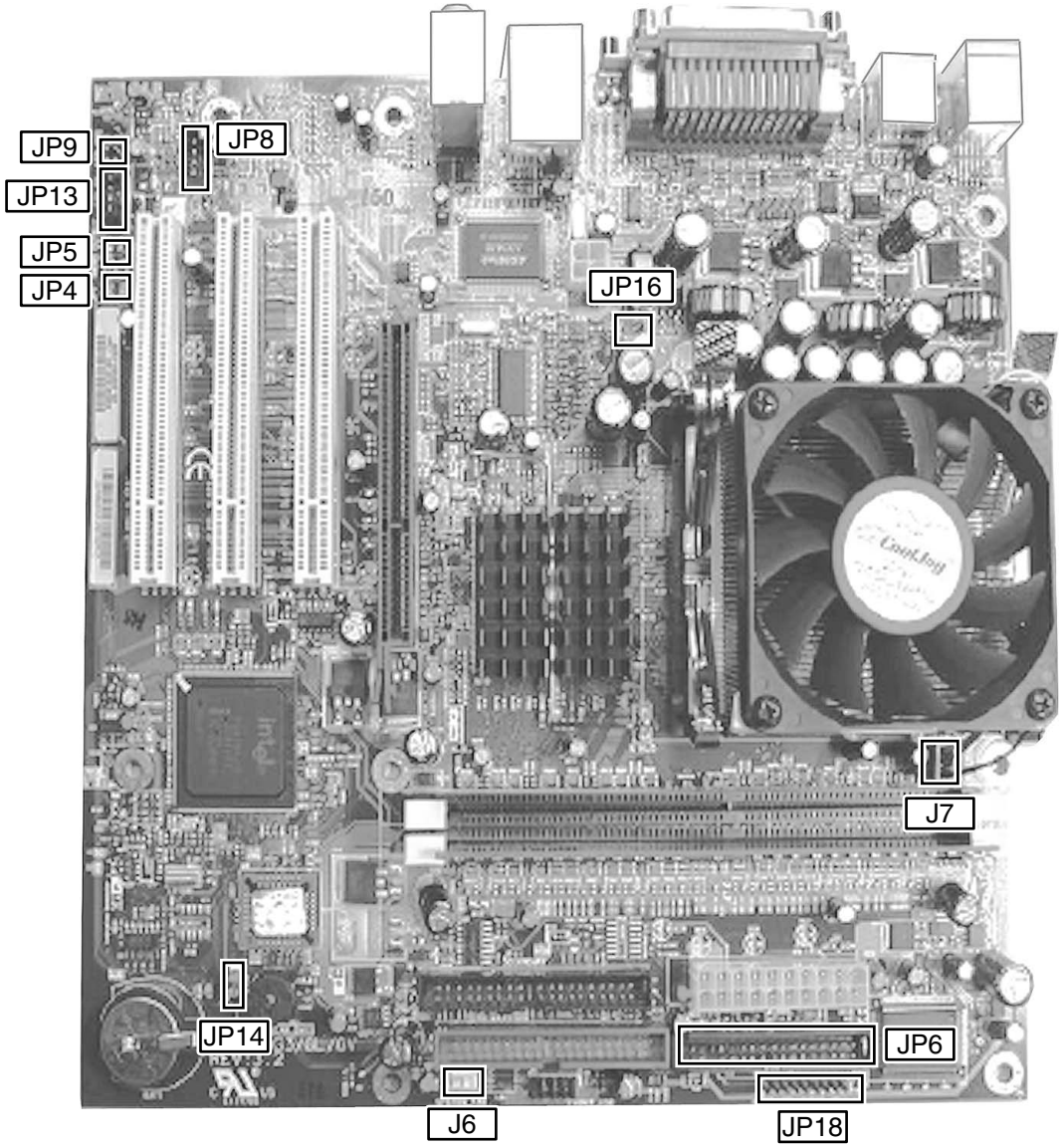

● Initial setting of the jumper switches

- The figure is a top view of a jumper switch.
- Above Pin 1 of a switch, a gray mark (shown in the figure on the right) is provided. With some switches, there will be a white mark above Pin 1 on the Motherboard.
- The position of the latch of a switch is indicated with a thick line, as shown in the figure on the right.
- The initial setting of a jumper switch is indicated by double lines, as shown in the figure on the right.

JP18 : Jumper switch for Power button, Reset, HDD LED, and Power LED

1 (–) - 2 (+)	IDE LED
3 (+) - 4 (+) 5 (–)	Power LED
6 (+) - 7 (–)	Power button
8 (–) - 9 (+)	Reset button

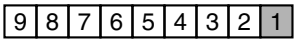

DKP3635 (Color of the cable: white) to Pin 1 of the jumper switch, as shown above.
If inappropriately connected, the unit will not start up.

JP14 : CMOS clear

1 - 2 : Position for normal use (factory-preset position)
2 - 3 : CMOS clear

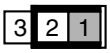

JP4 : SERIRQ for PCI Slot 3

OPEN : SERIRQ invalid (factory-preset position, SERIRQ not supported)
SHORT : SERIRQ valid

JP9 : Connector for audio and front panel

At the shipping, the jumper pins are connected to Pins 5-6 and Pins 9-10.

MIC_IN_FP	1	2	AUD_JACK_GND
MIC_BIAS	3	4	V_5P0_AUD_ANALOG
R_FNTOUT	5	6	R_RETIN
NOT connected	7	8	NOT connected
L_FNT_OUT	9	10	L_RETIN

JP16 : Selection of the clock frequency

1 - 2 : CPU select (factory-preset position)
2 - 3 : 100MHz
EMPTY : 133MHz

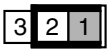

J7 : CPU fan jumper switch

Connect a CPU fan whose rotation-speed monitoring is supported.

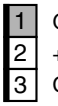

1 GND
2 +12V
3 CPU-fan-rotation-speed monitoring (by SIO)

Note: The CPU fan is installed in this unit at the factory.

No jumper pin or wire is connected to JP4, JP5, JP6, JP8, JP13, or J6.

5. PCB PARTS LIST

NOTES: ● *Parts marked by "NSP" are generally unavailable because they are not in our Master Spare Parts List.*
● *The ⚠ mark found on some component parts indicates the importance of the safety factor of the part. Therefore, when replacing, be sure to use parts of identical designation.*
● *When ordering resistors, first convert resistance values into code form as shown in the following examples.*
Ex.1 When there are 2 effective digits (any digit apart from 0), such as 560 ohm and 47k ohm (tolerance is shown by J=5%, and K=10%).

560 Ω	→ *56 x 10[1]* →	*561*	····· *RD1/4PU 5 6 1 J*
47k Ω	→ *47 x 10[3]* →	*473*	····· *RD1/4PU 4 7 3 J*
0.5 Ω	→ *R50*		····· *RN2H R 5 0 K*
1 Ω	→ *1R0*		····· *RS1P 1 R 0 K*

Ex.2 When there are 3 effective digits (such as in high precision metal film resistors).

5.62k Ω	→ *562 x 10[1]* →	*5621*	····· *RN1/4PC 5 6 2 1 F*

LIST OF ASSEMBLIES

Mark	No.	Description	Part No.
NSP	1	..ETC1 ASSY	DWM2160
	2	..PWRB(POLY) ASSY	DWZ1129
	2	..FLKB(WYV/RB) ASSY	DWZ1164
	2	..KEYB(WYV/RB) ASSY	DWZ1157
	2	..USBB ASSY	DWZ1159
	2	..DRV1B ASSY	DWZ1160
	2	..DRV2B ASSY	DWZ1161
NSP	1	..ETC2 ASSY	DWM2189
	2	..JKIB ASSY	DWZ1126
	2	..JKOB ASSY	DWZ1127
	2	..HPVB ASSY	DWZ1128
	2	..422IB ASSY	DWZ1133
	2	..JKDB ASSY	DWZ1134
	1	..PCIB ASSY	DWP1080
	1	..DECB ASSY	DWP1081
	1	..AVIB ASSY	DWV1202
⚠	1	..MOTHER BOARD ASSY	DXF1007(*1)

(*1)
• Replace the whole MOTHER BOARD Assy.
No part in the MOTHER BOARD Assy is provided as a repair parts.
• MOTHER BOARD Assy is supplied with lithium battery.

A JKIB ASSY

SEMICONDUCTORS

Mark	No.	Description	Part No.
		IC7401	BA7046F
		IC7803	LA73054
		IC7418, IC7423	MM1113XF
		IC7403	MM1114XF
		IC7404, IC7412, IC7414, IC7416, IC7422	MM1117XF
		IC7409	MM1118XF
		IC7701, IC7703, IC7704, IC7706	NJM4556AM
		IC7707-IC7710	NJM5532MD
⚠		IC7711	NJM78M05DL1A
		IC7622	PST9245
		IC7611, IC7614, IC7615, IC7618, IC7702	TC4W53FU
		IC7705, IC7802	TC4W53FU
		IC7402	TC7WH123FU
		IC7405, IC7410, IC7413, IC7415	TK15420M
		IC7419-IC7421	TK15420M
		IC7612, IC7613, IC7616, IC7617	UPC4570G2
		IC7619-IC7621	UPC4570G2
		Q7702, Q7714, Q7716	2SA1037K
		Q7409, Q7413, Q7414, Q7417, Q7420	2SA1576A
		Q7423	2SA1576A
		Q7831	2SC2412K
		Q7415, Q7418, Q7421, Q7424, Q7425	2SC4081
		Q7703-Q7712	2SD2114K
		Q7412	2SK210
		Q7426, Q7701, Q7713, Q7715	DTC114YK
		Q7613	DTC143EK
		Q7408, Q7410	HN1A01FU
		Q7416, Q7419, Q7422	HN1B01FU
		Q7407, Q7411	HN1C01FU
		Q7401, Q7402, Q7404, Q7405	RN4982
		Q7611, Q7612, Q7802-Q7804	RN4982
		D7611-D7618, D7623, D7624, D7701	1SS355
		D7401	MA111
		D7619-D7622	SML-310DT
		D7402-D7413, D7601-D7604	UDZS5R1(B)

COILS AND FILTERS

Mark	No.	Description	Part No.
		L7620, L7621, L7624, L7625	BTH1119
		F7412, F7414-F7419, F7802, F7831	DTF1069
		F7401-F7404	DTF1110
		L7961-L7964	VTL1089

SWITCHES AND RELAYS

Mark	No.	Description	Part No.
		RY7611	BSR1014

CAPACITORS

Mark	No.	Description	Part No.
		C7437, C7635, C7644, C7646, C7654	CCSRCH100D50
		C7413, C7433, C7474, C7475, C7477	CCSRCH101J50
		C7636, C7642, C7647, C7655, C7737	CCSRCH220J50
		C7741, C7748, C7753, C7961, C7963	CCSRCH220J50
		C7965, C7967	CCSRCH220J50
		C7409, C7601, C7602	CCSRCH221J50
		C7405	CCSRCH390J50
		C7706, C7726	CCSRCH471J50
		C7707, C7723	CCSRCH750J50
		C7805, C7817	CEVW101M10
		C7417, C7423, C7427, C7438	CEVW101M16
		C7445, C7446, C7458, C7460, C7479	CEVW101M16
		C7612, C7619, C7638, C7652	CEVW101M16
		C7656-C7659, C7718, C7719, C7731	CEVW101M16
		C7734, C7745	CEVW101M16
		C7738, C7740, C7751, C7752	CEVW220M35
		C7714	CEVW470M16
		C7634, C7641, C7645, C7653	CEVWNP100M25
		C7705, C7709, C7717, C7721, C7722	CEVWNP470M10
		C7730	CEVWNP470M10

Mark No.	Description	Part No.
	C7404	CKSRYB102K50
	C7436, C7442, C7456, C7457, C7470	CKSRYB103K50
	C7473, C7489, C7492, C7611	CKSRYB103K50
	C7403, C7406, C7408, C7411, C7412	CKSRYB104K16
	C7414, C7415, C7418, C7420, C7422	CKSRYB104K16
	C7424-C7426, C7430, C7439-C7441	CKSRYB104K16
	C7444, C7447, C7451, C7455, C7459	CKSRYB104K16
	C7461, C7463, C7464, C7469, C7480	CKSRYB104K16
	C7483, C7484, C7488, C7613	CKSRYB104K16
	C7615, C7616, C7620-C7623	CKSRYB104K16
	C7626, C7627, C7630, C7632, C7633	CKSRYB104K16
	C7637, C7639, C7643, C7648, C7649	CKSRYB104K16
	C7651, C7660, C7661, C7703, C7704	CKSRYB104K16
	C7711-C7713, C7715, C7716, C7720	CKSRYB104K16
	C7725, C7728, C7729, C7732, C7733	CKSRYB104K16
	C7735, C7736, C7742, C7744, C7747	CKSRYB104K16
	C7749, C7755, C7757, C7803, C7807	CKSRYB104K16
	C7809, C7810, C7812, C7815, C7816	CKSRYB104K16
	C7831	CKSRYB104K16
	C7401, C7416, C7434, C7435, C7448	CKSRYB105K6R3
	C7476, C7481, C7617, C7628, C7806	CKSRYB105K6R3
	C7808, C7813, C7818	CKSRYB105K6R3
	C7450, C7453, C7454, C7467, C7468	CSZSR100M16
	C7486, C7487	CSZSR100M16
RESISTORS		
	R7706, R7724	RN1/16SE1602D
	R7707, R7725	RN1/16SE3302D
	R7479	RS1/16S1001F
	R7444, R7448, R7484, R7506, R7550	RS1/16S1801F
	R7449, R7450, R7485, R7486	RS1/16S2201F
	R7507, R7508, R7551, R7552	RS1/16S2201F
	R7446, R7457, R7459, R7460, R7480	RS1/16S4700F
	R7492, R7493, R7518, R7519	RS1/16S4700F
	R7557, R7558	RS1/16S4700F
	R7451, R7487, R7509, R7553	RS1/16S5600F
	R7431, R7470, R7500, R7537	RS1/16S5601F
	R7466, R7467, R7476, R7478	RS1/16S7500F
	R7502, R7503, R7533, R7534	RS1/16S7500F
	R7419, R7420, R7434, R7524, R7525	RS1/16S75R0F
	R7530	RS1/16S75R0F
	Other Resistors	RS1/16S###J
OTHERS		
	CN7402 PH CONNECTOR	AKM1277
	CN7613 PH CONNECTOR	AKM1278
	JA7601 2P PIN JACK	BKB1017
	CN7801, CN7802 CONNECTOR	CKS4361
	JA7402 BNC CONNECTOR	DKN1267
	JA7403 BNC CONNECTOR	DKN1268
	JA7961 CANNON CONNECTOR	DKN1269
	CN7701 8P CONNECTOR	S8B-ZR-SM3A
	7401 PCB BINDER	VEF1040
	JA7404 DV-TERMINAL	VKB1186
	JA7401 4P MINIDINSOCKET	VKN1072
	CN7611 20PCONNECTOR	VKN1589
	KN7401, KN7402	VNF1084
	WRAPPING TERMINAL	
	KN7961 SCREW PLATE	VNE1948

BJKDB ASSY

Mark No.	Description	Part No.
SEMICONDUCTORS		
	IC7901	DS8922M
	IC7941	LM1881M
	IC7921	LM361M
	IC7923	NJM4558M
	D7923, D7924	1SS355
	D7925-D7927	SML-310DT
	D7901-D7908, D7921, D7922	UDZS5R1(B)
COILS AND FILTERS		
	F7905, F7921-F7923, F7941	DTF1069
	L7901-L7904, L7906-L7909	VTL1079
SWITCHES AND RELAYS		
	S7941	VSH1009
CAPACITORS		
	C7927, C7928	CCSRCH221J50
	C7945	CCSRCH471J50
	C7922, C7929	CEVW101M16
	C7926, C7943	CEVW470M16
	C7901, C7921, C7924, C7925	CKSRYB104K16
	C7941, C7942, C7944	CKSRYB104K16
RESISTORS		
	R7901, R7907, R7909	RAB4C220J
	R7943	RS1/16S75R0F
	Other Resistors	RS1/16S###J
OTHERS		
	JA7941 BNC CONNECTOR	DKN1268
	CN7901 D-SUB CONNECTOR	DKN1271
	CN7902 11P CONNECTOR	S11B-ZR-SM3A
	CN7941 ZR CONNECTOR	S2B-ZR-SM3A
	CN7903 6P CONNECTOR	S6B-ZR-SM3A

C422IB ASSY

Mark No.	Description	Part No.
SEMICONDUCTORS		
	D7951-D7958	UDZS5R1(B)
OTHERS		
	CN7951 D-SUB CONNECTOR	DKN1271
	CN7952 6P CONNECTOR	S6B-ZR-SM3A

DHPVB ASSY

Mark No.	Description	Part No.
SEMICONDUCTORS		
	IC661	BH3544F
	Q661	RN4982
	D661	SML-310DT
COILS AND FILTERS		
	L661-L664	QTL1015
CAPACITORS		
	C670, C671	CCSRCH101J50
	C663, C668, C677	CEVW101M16
	C675	CEVW470M16
	C664, C676	CKSRYB104K16
	C666, C673, C674	CKSRYB105K6R3

Mark	No.	Description	Part No.
		RESISTORS	
		VR661	DCS1063
		Other Resistors	RS1/16S###J
		OTHERS	
		CN661 8P CONNECTOR	S8B-ZR-SM3A
		JA661 HEADPHONE JACK	VKN1802
		EJKOB ASSY	
		SEMICONDUCTORS	
		D7851-D7868	UDZS5R1(B)
		COILS AND FILTERS	
		L7981-L7984	VTL1089
		CAPACITORS	
		C7857, C7860, C7865, C7866, C7869	CCSRCH101J50
		C7874, C7877, C7878, C7881	CCSRCH220J50
		C7851, C7852, C7873	CCSRCH221J50
		C7856	CCSRCH390J50
		C7981-C7984	CEANP471M10
		C7855, C7859, C7861, C7864, C7868	CEAT102M10
		C7872	CEVW101M10
		C7853, C7854, C7858, C7862, C7863	CKSRYB104K16
		C7867, C7870	CKSRYB104K16
		RESISTORS	
		R7853, R7855-R7859	RS1/16S68R0F
		R7860	RS1/16S75R0F
		Other Resistors	RS1/16S###J
		OTHERS	
		JA7851 2P PIN JACK	BKB1017
		CN7851 CONNECTOR	CKS4361
		JA7853 BN CCONNECTOR	DKN1267
		JA7854 BN CCONNECTOR	DKN1268
		JA7981 CANNON CONNECTOR	DKN1270
		JA7855 1P PIN JACK	VKB1159
		JA7852 4P MINI DIN SOCKET	VKN1072
		KN7981 SCREW PLATE	VNE1948
		FDECB ASSY	
		SEMICONDUCTORS	
		IC1711	ADV7172KST
⚠		IC1101	BA033FP
		IC1411	BU2288FV
		IC1412	CY2081SL-655
		IC1211	HD6417709AF100B
⚠		IC1351	ICP-S2.3
		IC1512	K4S641632H-TC75
		IC1611	K4S643232H-TC60
		IC1513	M65776AFP
		IC1413	NJM2100M
		IC1751	PCM1716E
		IC1612	PD6454D8
⚠		IC1111	PQ025EZ01ZP
⚠		IC1121	PQ070XZ02ZP
		IC1391	PST9142N

Mark	No.	Description	Part No.
		IC1416-IC1418, IC1851-IC1853	SN74AHC2G53HDCT
		IC1153, IC1415, IC1511, IC1651-IC1653	TC74LCX541FT
		IC1172	TC74VHC04FT
		IC1171	TC74VHC125FT
		IC1392	TC74VHC14FT
		IC1151, IC1414	TC7WU04FU
		IC1311	XC2S100-5PQ208C
		Q1811-Q1819	2SA1576A
		Q1752	2SC4081
		Q1211	2SK2033
		Q1851	DTA124EUA
		Q1411, Q1412, Q1471, Q1751, Q1852	DTC124EUA
		Q1391	UMH1N
		D1391, D1751	1SS355
		D1411	1SV323
		D1137	SML-310DT
		D1181, D1182, D1185, D1186, D1311	SML-310YT
		COILS AND FILTERS	
		F1152, F1153, F1412, F1651-F1653	DTF1069
		F1851	DTF1069
		F1751, F1755, F1756	VTF1096
		L1151	VTL1084
		L1411, L1462, L1781	VTL1157
		CAPACITORS	
		C1233	CCSRCH180J50
		C1234	CCSRCH220J50
		C1212, C1213	CCSRCH471J50
		C1415	CCSRCH560J50
		C1426	CCSRCH5R0C50
		C1102, C1111	CEVW100M16
		C1462	CEVW101M10
		C1121, C1414, C1417, C1711, C1717	CEVW101M6R3
		C1752, C1759-C1761, C1782	CEVW101M6R3
		C1393	CEVW1R0M50
		C1104, C1113	CEVW220M6R3
		C1123, C1216, C1333, C1335, C1516	CEVW221M4
		C1523, C1615, C1622	CEVW221M4
		C1101, C1115, C1154, C1171, C1424	CKSRYB103K50
		C1427, C1651-C1653	CKSRYB103K50
		C1153, C1172-C1174, C1183, C1211	CKSRYB104K16
		C1214, C1215, C1218-C1232	CKSRYB104K16
		C1311-C1332, C1337-C1342	CKSRYB104K16
		C1353-C1356, C1363-C1368	CKSRYB104K16
		C1375-C1377, C1391, C1392, C1413	CKSRYB104K16
		C1416, C1421-C1423, C1461, C1463	CKSRYB104K16
		C1512, C1513, C1518-C1522	CKSRYB104K16
		C1524-C1529, C1533-C1539	CKSRYB104K16
		C1541-C1551, C1611-C1614	CKSRYB104K16
		C1617-C1621, C1624, C1713, C1716	CKSRYB104K16
		C1718-C1725, C1751, C1753	CKSRYB104K16
		C1755-C1758, C1762, C1763, C1781	CKSRYB104K16
		C1783, C1851-C1853	CKSRYB104K16
		C1412, C1418, C1419, C1474, C1511	CKSRYB105K6R3
		C1515, C1530-C1532	CKSRYB105K6R3
		C1420	CKSRYB332K50
		C1103, C1112	CKSRYB334K10
		C1411	CKSRYB472K50
		C1754, C1764	CKSRYF105Z10

Mark No.	Description	Part No.
RESISTORS		
	R711-R714, R732, R734	RAB4C103J
	R745, R746, R755, R756	RAB4C103J
	R715-R731, R733, R735-R744	RAB4C220J
	R1123	RN1/16SE1001D
	R1439	RN1/16SE1202D
	R1420	RN1/16SE3000D
	R1438	RN1/16SE4701D
	R1411	RN1/16SE6800D
	R1824, R1828	RS1/16S1000F
	R1820	RS1/16S1500F
	R1719	RS1/16S1502F
	R1513	RS1/16S1801F
	R1829, R1833, R1835	RS1/16S2200F
	R1512	RS1/16S3001F
	R1520	RS1/16S3301F
	R1125	RS1/16S3900F
	R1724, R1734	RS1/16S4701F
	R1720	RS1/16S4702F
	R1813, R1816, R1821	RS1/16S62R0F
	R1723, R1732	RS1/16S6800F
	R1721	RS1/16S6801F
	R1811, R1815, R1818	RS1/16S82R0F
	R1522	RS1/8S4R7J
	Other Resistors	RS1/16S###J
OTHERS		
	X1212 CRYSTAL RESONATOR	BSS1091
	CN1811 CONNECTOR	CKS4361
	CN1651 30P FLEXIBLE CONNECTOR	DKN1192
	X1151 CHIP CERALOCK (40MHz)	DSS1101
	X1411 CRYSTAL RESONATOR	DSS1117
	CN1171 CONNECTOR 11P	S11B-ZR-SM3A
	CN1471 ZR CONNECTOR	S2B-ZR-SM3A
	CN1174 CONNECTOR 5P	S5B-ZR-SM3A
	CN1172 CONNECTOR 6P	S6B-ZR-SM3A
	CN1173 CONNECTOR 7P	S7B-ZR-SM3A
	CN1183 7P FFC CONNECTOR	VKN1299
	KN1811, KN1812	VNF1109

GPCIB ASSY

Mark No.	Description	Part No.
SEMICONDUCTORS		
⚠	IC2302	BA033FP
	IC2405	HD6417709AF100B
	IC2003	HY57V641620HGT-7
	IC2404	K4S643232H-TC60
	IC2406	PD6453D8
	IC2001	PE5219A
⚠	IC2305	PQ025EZ01ZP
⚠	IC2303	PQ070XZ02ZP
	IC2306	PST9142N
	IC2110	TC74LCX16245AFT
	IC2002, IC2103-IC2108, IC2308, IC2403	TC74LCX541FT
	IC2109	TC74LCX574FT
	IC2407	TC74VHC04FT
	IC2401	TC74VHC125FT
	IC2307	TC74VHC14FT
	IC2304	TC7SH08FU
	IC2102	TC7WT126FU
	IC2402	TC7WU04FU
	IC2309	XC2S100-5PQ208C
	Q2301	UMH1N
	D2303	1SS355
	D2101, D2102, D2301	SML-310DT
	D2304-D2308	SML-310YT
⚠	TH2301, TH2302	MINISMDC020
⚠	TH2351	MINISMDM160
COILS AND FILTERS		
	F2003-F2006, F2306-F2308	DTF1070
	F2401, F2402	DTF1070
	F2301, F2302	VTH1040
	L2101, L2403-L2409	VTL1079
	L2001, L2002	VTL1084
CAPACITORS		
	C2180	CCSRCH101J50
	C2447, C2448	CCSRCH180J50
	C2412, C2413	CCSRCH471J50
	C2301, C2303, C2304, C2306, C2307	CEVW100M16
	C2309, C2311, C2313, C2314	CEVW100M16
	C2317-C2319, C2333, C2337, C2416	CEVW100M16
	C2418	CEVW100M16
	C2323	CEVW1R0M50
	C2001-C2003, C2026	CEVW221M4
	C2308, C2310, C2315, C2320, C2322	CKSRYB103K50
	C2324-C2332, C2336, C2338-C2348	CKSRYB103K50
	C2350, C2351, C2353-C2373	CKSRYB103K50
	C2401-C2405, C2408, C2409, C2411	CKSRYB103K50
	C2414, C2415, C2417, C2419-C2430	CKSRYB103K50
	C2432-C2446	CKSRYB103K50
	C2004-C2022, C2024, C2025	CKSRYB104K16
	C2027-C2031, C2101, C2102, C2107	CKSRYB104K16
	C2122, C2143, C2146, C2156, C2168	CKSRYB104K16
	C2190, C2194, C2321	CKSRYB104K16
	C2117	CKSRYB105K6R3
	C2305, C2312, C2316	CKSRYB224K10
RESISTORS		
	R2008-R2010, R2013, R2023-R2025	RAB4C0R0J
	R2027, R2029, R2031	RAB4C0R0J
	R2002, R2014-R2020, R2050, R2051	RAB4C103J
	R2409-R2416	RAB4C103J
	R2003-R2007, R2012, R2021, R2028	RAB4C220J
	R2030, R2037, R2042, R2043	RAB4C220J
	R2064-R2068, R2070-R2073	RAB4C220J
	R2075-R2078, R2478-R2480, R2484	RAB4C220J
	R2486, R2487, R2503-R2510	RAB4C220J
	R2316	RN1/16SE1001D
	R2313	RS1/16S3900F
	Other Resistors	RS1/16S###J
OTHERS		
	CN2403 CONNECTOR 11P	B11B-ZR-SM3
	CN2404 CONNECTOR 5P	B5B-ZR-SM3
	CN2402 CONNECTOR 6P	B6B-ZR-SM3
	CN2401 CONNECTOR 7P	B7B-ZR-SM3
	X2402 CRYSTAL RESONATOR	BSS1091

Mark	No.	Description	Part No.
	X2401	CHIPCERA LOCK(40MHz)	DSS1101
	CN2102	CONNECTOR 11P	S11B-ZR-SM3A
	CN2101	4P CONNECTOR	S4B-ZR-SM3A
	CN2405	7P FFC CONNECTOR	VKN1299
	CN2103, CN2104	50P CONNECTOR	VKN1590
	KN2301, KN2302	EARTH METAL	VNF1109
	X2001	CRYSTAL RESONATOR	VSS1138

HAVIB ASSY

SEMICONDUCTORS

	IC3803	BA4558F-HT
	IC6004	CS8420-CSZD1
	IC7004	DVXCEL-BA1
⚠	IC3205	ICP-S2.3
	IC5001	M2V64S50DTP-6
	IC3501	NJM13404V
	IC3301	NJM2115M
⚠	IC3202	NJM78M05DL1A
⚠	IC3201, IC3203	NJM78M09DL1A
⚠	IC3204	NJM79M09DL1A
	IC3802	PCM1800-1
	IC3502	PD0272A1
	IC5002	PD6342A
	IC6003	PE7004A
	IC3309	PLL1700E
⚠	IC7501	PQ070XZ02ZP
	IC3302, IC3306	SN74AHC2G53HDCT
	IC3004	TC74LCX16245AFT
	IC3002, IC3003, IC3006, IC3007, IC3304	TC74LCX541FT
	IC3308, IC6501, IC6502, IC7001	TC74LCX541FT
	IC6005	TC74LCX74FT
	IC3005	TC74VHCT541AFT
	IC3310	TC74VHCU04FT
	IC3307	TC7SH04F
	IC5003	TC7SH08FU
	IC3303, IC3305	TC7SLU04F
	IC3801	TC9412AF
	IC4002	TSB41AB2PAP
	IC4001	TSB42AB4PDT
	IC3804	UPC4570G2
	IC6002	UPD61003
	IC7002, IC7003	W986432DH-7
	IC5004	XC2S50-5PQ208C
	D3501-D3504, D3801-D3804	1SS355
	D4001-D4008	1SS355
	D3301	1SV323
	D7002, D7003	EP10QY03
	D3201-D3204	SML-310DT
	D5001-D5005	SML-310YT

COILS AND FILTERS

	F7502-F7505	CTF1558
	F3301-F3305, F3307-F3310, F3803	DTF1069
	F507	DTF1069
	F3201-F3204, F3208-F3210, F501	DTF1070
	F706, F707	DTF1070
	L3501, L3502	LCYA100J2520
	L3309	LCYA1R2J2520
	F3205-F3207, F4002, F4003	VTF1171
	F5002-F5005, F7002-F7004	VTF1171
	F7006, F7007, F7501	VTF1171
	L3312	VTL1078
	L3305-L3308, L3313, L3314	VTL1079
	L3319-L3321, L3323-L3328, L7008	VTL1079

CAPACITORS

	C4026, C6037, C6042	CCSRCH102J50
	C4001, C4002	CCSRCH120J50
	C4025	CCSRCH221J50
	C3312, C7050-C7067	CCSRCH470J50
	C3810, C3811	CCSRCH471J50
	C3315	CCSRCK2R0C50
	C3204, C3210, C3212	CEHVKW470M16
	C3207, C3213-C3215, C3224, C3225	CEVW101M16
	C3801, C3804, C3815, C3818	CEVW101M16
	C3309, C3310, C3320, C3509-C3511	CEVW101M6R3
	C3522, C3526, C3533, C4012	CEVW101M6R3
	C6039, C6040	CEVW101M6R3
	C3317, C3507, C5010, C5011	CEVW221M4
	C5117, C5118, C6002, C6010, C6033	CEVW221M4
	C7005, C7007, C7009, C7021	CEVW221M4
	C7024, C7025, C7503, C7505	CEVW221M4
	C3805-C3809, C3813, C3816, C3817	CEVW330M25
	C3513, C3534, C7012, C7013, C7018	CKSRYB102K50
	C7020, C7041	CKSRYB102K50
	C3311, C3529, C6043, C6046, C7014	CKSRYB103K50
	C7016, C7019, C7040, C7043, C7504	CKSRYB103K50
	C3101-C3106, C3201-C3203	CKSRYB104K16
	C3205, C3206, C3208, C3209, C3211	CKSRYB104K16
	C3216-C3222, C3226, C3227	CKSRYB104K16
	C3301-C3308, C3314, C3316	CKSRYB104K16
	C3318, C3319, C3321, C3322	CKSRYB104K16
	C3502-C3506, C3508, C3512	CKSRYB104K16
	C3514-C3521, C3523-C3525	CKSRYB104K16
	C3527, C3528, C3530-C3532	CKSRYB104K16
	C3535-C3537, C3539-C3542, C3544	CKSRYB104K16
	C3547, C3549, C3550, C3802, C3803	CKSRYB104K16
	C3819, C4003-C4005, C4007	CKSRYB104K16
	C4009-C4011, C4013, C4015-C4017	CKSRYB104K16
	C4019-C4024, C4027, C4029-C4031	CKSRYB104K16
	C5002-C5009, C5012-C5023	CKSRYB104K16
	C5026-C5034, C5036-C5054	CKSRYB104K16
	C5089-C5116, C6001, C6003-C6009	CKSRYB104K16
	C6011-C6032, C6034-C6036, C6038	CKSRYB104K16
	C6041, C6501, C6502, C7001-C7004	CKSRYB104K16
	C7006, C7008, C7010, C7011, C7015	CKSRYB104K16
	C7017, C7022, C7023, C7026-C7039	CKSRYB104K16
	C7042, C7044-C7049, C7068-C7073	CKSRYB104K16
	C7501	CKSRYB104K16
	C3538, C3545, C3548	CKSRYB105K6R3
	C6045	CKSRYB472K50
	C4014, C4018	CKSRYF105Z10
	C6044	CKSRYF224Z16
	VC3301 (20p)	VCM1008

Mark No.	Description	Part No.
RESISTORS		
	R3526, R3534, R3538, R3542	RAB4C0R0J
	R3555-R3557, R5027, R5035	RAB4C0R0J
	R4019, R4020, R4027, R4028	RAB4C102J
	R3504, R3505, R3540, R3546	RAB4C103J
	R3548-R3551, R4010, R4056	RAB4C103J
	R4067, R4068, R6030, R6036, R6040	RAB4C103J
	R6044-R6046, R7091-R7095	RAB4C103J
	R4005-R4009, R4011, R4021, R4022	RAB4C220J
	R4030-R4032, R4039, R4047	RAB4C220J
	R4057, R4058, R4065, R4069-R4074	RAB4C220J
	R5002, R5003, R5005, R5006, R5010	RAB4C220J
	R5015-R5017, R5021-R5025, R5031	RAB4C220J
	R5034, R5036-R5041, R5043-R5045	RAB4C220J
	R5047-R5054, R5056, R5057	RAB4C220J
	R5076-R5079, R5082, R5084, R5088	RAB4C220J
	R5091-R5094, R5770-R5774	RAB4C220J
	R5776-R5782, R6001-R6007	RAB4C220J
	R6022, R6023, R6028, R6029	RAB4C220J
	R6032, R6033, R6037, R6038	RAB4C220J
	R6041, R6042, R6048, R6049, R6063	RAB4C220J
	R6070-R6072, R6074, R6075	RAB4C220J
	R6525, R6526, R7003-R7006, R7044	RAB4C220J
	R7056, R7063, R7068	RAB4C220J
	R4033, R4034, R4042, R4043	RN1/16SC56R0D
	R3306, R3331, R3335, R3336, R3340	RS1/10S0R0J
	R3503, R3506, R3801, R3807	RS1/10S0R0J
	R3814, R3815, R4012, R502	RS1/10S0R0J
	R505, R506, R5101, R5102, R6008	RS1/10S0R0J
	R6013, R6014, R6076, R6077, R7017	RS1/10S0R0J
	R7096-R7098, R7501	RS1/10S0R0J
	R7054	RS1/10S100J
	R7053	RS1/10S150J
	R7507	RS1/16S1001D
	R3532	RS1/16S1001F
	R3528	RS1/16S1002F
	R3501	RS1/16S1003F
	R3529	RS1/16S1301F
	R3524	RS1/16S1802F
	R3531	RS1/16S3601F
	R7504	RS1/16S5600F
	R4023	RS1/16S6341D
	Other Resistors	RS1/16S###J
OTHERS		
	CN3203, CN3204 CONNECTOR 4P	AKM1275
	CN4001 CONNECTOR 4P	B4B-ZR-SM3
	CN3202 CONNECTOR	AKM1293
	CN3201 PH CONNECTOR 14P	AKM1300
	CN3301 CONNECTOR 4P	B4B-ZR-SM3
	CN3001, CN3002 CONNECTOR	CKS3930
	CN5501, CN5503, CN6002 CONNECTOR	CKS4361
	CN5502 26P CONNECTOR	VKN1566
	CN3501 CONNECTOR 20P	VKN1589
	KN3001-KN3007	VNF1109
	X3301 CRYSTAL RESONATOR (27.000MHz)	VSS1146
	X4001 CRYSTAL RESONATOR (24.576MHz)	VSS1151
	X7001 CRYSTAL RESONATOR (27.500MHz)	VSS1153

I PWRB(POLY) ASSY

Mark No.	Description	Part No.
SEMICONDUCTORS		
	IC401, IC451	AN8015SH
	IC301	BA9743AFV
	IC101	BP5232-25A
	IC201	BP5233-33A
⚠	IC4-IC6	ICP-N10
⚠	IC8	ICP-S2.3
	IC3	TC74HC05AF
	Q101, Q201	2SA1037K
	Q14-Q16, Q21, Q26, Q28	2SA1162
	Q5, Q9	2SA1162
	Q301, Q302, Q401, Q402, Q451	2SA1900
	Q18-Q20	2SD2114K
	Q24	DTA124EUA
	Q1, Q12, Q13, Q2	DTC124EUA
	Q22, Q23, Q25, Q29	DTC124EUA
	Q3, Q4, Q6-Q8	DTC124EUA
	Q10, Q17, Q27, Q30	UMH1N
	D1, D14-D18, D2	1SS355
	D20, D21, D23, D3-D8	1SS355
	D302, D402, D403, D452, D453	RB400D
	D10-D13, D19, D9	SML-310DT
	D24, D25	SML-310YT
⚠	TH1	MINISMDM160
COILS AND FILTERS		
	L303	BTH1119
	L301, L401	DTH1191
	L451	DTH1192
SWITCHES AND RELAYS		
	RY1, RY2	BSR1014
CAPACITORS		
	C309, C407, C455	CCSRCH221J50
	C101, C201, C90	CEAT102M16
	C305, C306	CEAT470M35
	C103, C203	CEAT471M10
	C33, C35, C37	CEAT471M35
	C21-C23, C308, C403, C453	CEVW100M35
	C10, C12, C2, C4	CEVW100M50
	C457, C458, C6, C8	CEVW100M50
	C312-C314	CEVW101M10
	C405	CEVW101M16
	C410	CEVW330M35
	C401, C451	CKSRYB102K50
	C1, C11, C13-C16	CKSRYB103K50
	C18-C20, C24, C29, C3	CKSRYB103K50
	C32, C34, C36, C38-C45	CKSRYB103K50
	C5, C7, C9	CKSRYB103K50
	C315	CKSRYB104K16
	C102, C202, C307, C310, C402	CKSRYF104Z25
	C452	CKSRYF104Z25
	C301, C304, C408, C456	CKSRYF105Z10
	C404, C454	CSZS100M10
	C311	CSZS330M6R3

Mark No.	Description	Part No.
	RESISTORS	
	R409, R459	RN1/16SE1203D
	R312, R318	RN1/16SE1502D
A	R112	RN1/16SE2402D
	R212, R421	RN1/16SE2702D
	R307	RN1/16SE3302D
	R401, R453	RN1/16SE3601D
	R311	RN1/16SE3902D
	R464	RN1/16SE4702D
	R319	RN1/16SE5102D
	R306	RN1/16SE6202D
	R403, R451	RN1/16SE8201D
	R404, R455	RN1/16SE9101D
	R101, R108, R201, R208	RS1/10S0R0J
B	R302, R303, R317, R408, R411	RS1/10S0R0J
	R420, R452, R469, R85-R87	RS1/10S0R0J
	R69, R70, R73, R74	RS1/10S270J
	R77, R78	RS1/10S270J
	R405, R456	RS1/10S680J
	R308, R309	RS1/10S752J
	VR201 (1k)	VCP1125
	VR101 (2.2k)	VCP1127
	Other Resistors	RS1/16S###J
	OTHERS	
C	CN3 PLUG 20-P	AKM1149
	CN5 3P PH CONNECTOR	AKM1274
	CN2 KRCONNECTOR 14P	B14B-PH-K-S
	CN6 CONNECTOR 6P	B6B-ZR-SM3
	CN1, CN4 FORAT XPSU CONNECTOR	DKN1272
	CN9-CN11 PLUG (2P)	KM200SA2
	KN1-KN3 WRAPPING TERMINAL	VNF1084

J FLKB(WYV/RB) ASSY

D	**SEMICONDUCTORS**	
	IC501	PE5392B8
	IC504	PST9142N
	IC502, IC503	PT6315
	IC505	RPM7140-H4
	Q511	2SA1162
	Q509	2SB1260
	Q504, Q505	DTA124EUA
	Q501, Q502, Q506-Q508	DTA143EUA
	Q510	DTC124EUA
	D501, D504, D511-D520	1SS355
E	D508-D510	SLR-343MC
	D506	SPR-39MVWF(MN)
	D502, D503, D505	UDZS6R2(B)
	COILS AND FILTERS	
	L501	QTL1015
	F501	VTH1009
	SWITCHES AND RELAYS	
	S501-S507, S509	VSG1024

Mark No.	Description	Part No.
	CAPACITORS	
	C521-C523	CEVW101M16
	C503, C511	CEVW101M6R3
	C513, C517-C520	CKSRYB103K50
	C501, C502, C504-C509, C512	CKSRYF104Z25
	C514-C516	CKSRYF104Z25
	RESISTORS	
	All Resistors	RS1/16S###J
	OTHERS	
	CN502 CONNECTOR 6P	52492-0620
	CN503 CONNECTOR 25P	52492-2520
	CN504 CONNECTOR 3P	53025-0310
	CN501 PLUG20P	BKM1070
	V501, V502 FL TUBE	DAW1019
	0 LED SPACER	DEC2592
	CN505 9P CONNECTOR	VKN1947
	X501 CHIP CERAMIC RESONATOR (5MHz)	VSS1102

K KEYB(WYV/RB) ASSY

	SEMICONDUCTORS	
	Q602, Q605, Q609, Q612	DTA124EUA
	D603, D606, D608, D611	NSPW310BS-4113
	D613	UDZS6R2(B)
	SWITCHES AND RELAYS	
	S601-S610	VSG1024
	CAPACITORS	
	C601, C602	CKSRYF104Z25
	RESISTORS	
	All Resistors	RS1/16S###J
	OTHERS	
	CN602 CONNECTOR 6P	52492-0620
	CN601 CONNECTOR 25P	52492-2520
	CN603 CONNECTOR	VKN1943

L DRV1B ASSY

	SEMICONDUCTORS	
	Q631-Q633	DTA143EUA
	D631	SLR-343DC
	D632	SPR-39MVWF(MN)
	SWITCHES AND RELAYS	
	S631	VSG1024
	CAPACITORS	
	C631	CKSRYF104Z25
	RESISTORS	
	All Resistors	RS1/16S###J
	OTHERS	
	CN631 CONNECTOR 6P	52492-0620
	0 LED SPACER	DEC2592

Mark	No.	Description	Part No.

MDRV2B ASSY

SEMICONDUCTORS

Q641-Q643	DTA143EUA
D641	SLR-343DC
D642	SPR-39MVWF(MN)

SWITCHES AND RELAYS

S641	VSG1024

CAPACITORS

C641	CKSRYF104Z25

RESISTORS

All Resistors	RS1/16S###J

OTHERS

CN641 CONNECTOR 6P	52492-0620
0 LED SPACER	DEC2592

NUSBB ASSY

SEMICONDUCTORS

D681	SML-310DT

CAPACITORS

C684	CCSRCH102J50
C691	CEAT471M10
C681	CKSRYF104Z25

RESISTORS

R706, R707	RS1/10S0R0J
Other Resistors	RS1/16S###J

OTHERS

CN684 3P PH CONNECTOR	AKM1274
JA681 USBCONNECTOR	DKN1273
CN681 RF HEADER	DKN1274
KN682 WRAPPING TERMINAL	VNF1084

6. ADJUSTMENT
6.1 27MHz CLOCK ADJUSTMENT

■ Jigs and Measuring Instruments

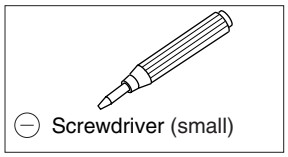

■ Necessary Adjustment Points

When	Adjustment Points
Exchange the AVIB Assy	VC3301 (27MHz Clock Adjustment)

■ Adjustment and Adjustment Points

H AVIB ASSY

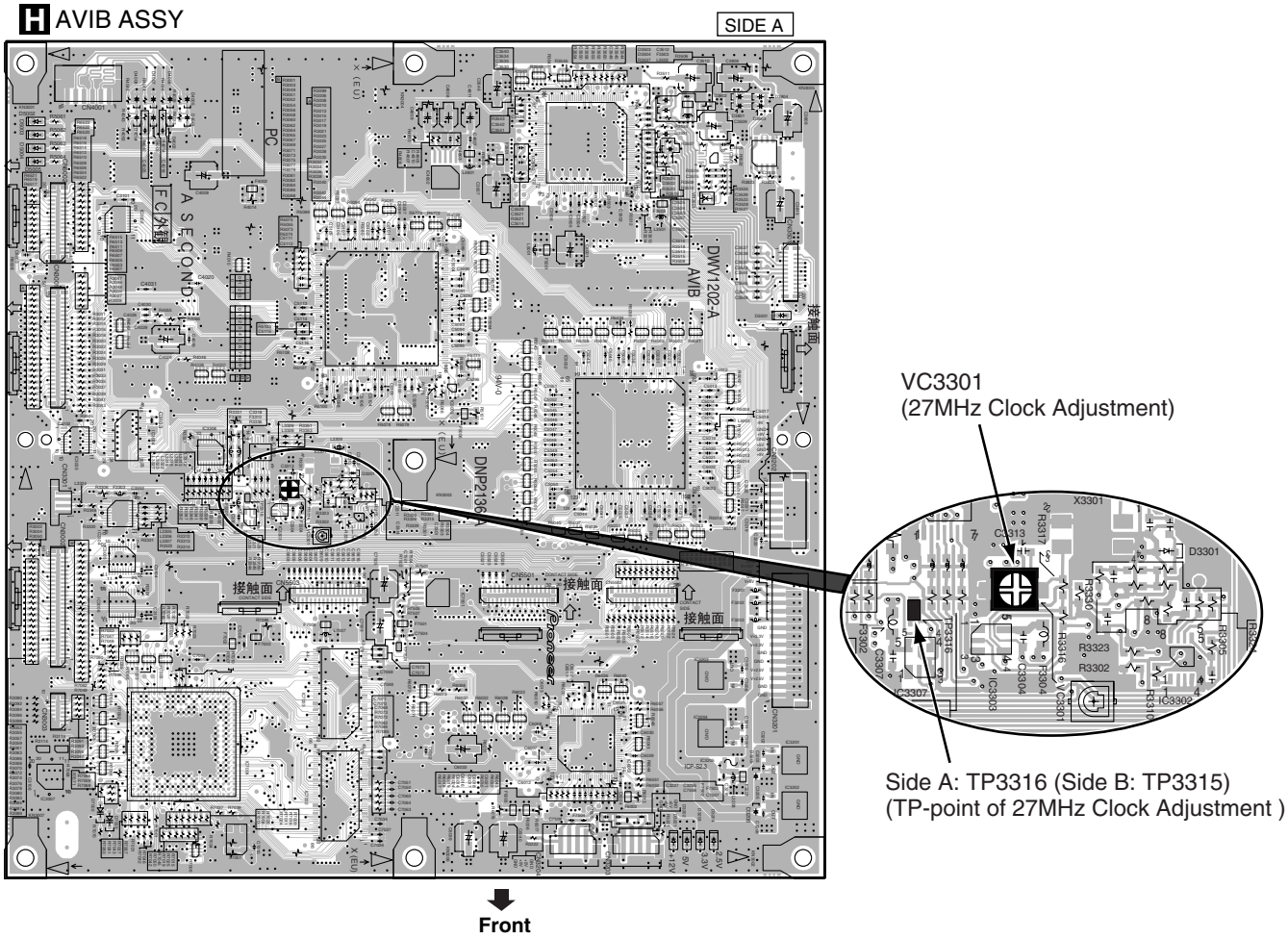

■ How to Adjust

Adjustment conditions: While adjusting, there must be no video input connected.

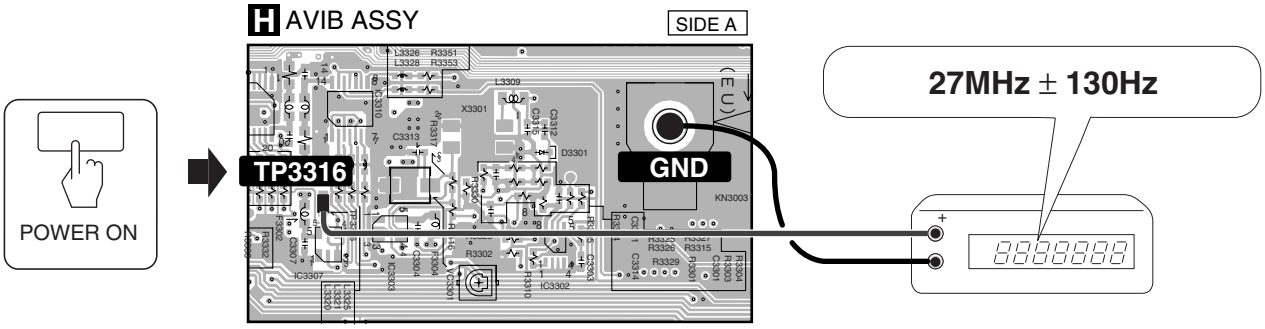

7. GENERAL INFORMATION

7.1 DIAGNOSIS

7.1.1 TESTMODE

1) How to enter Test mode

Using the GGF1067 remote control unit for service, press the [ESC] key then the [TEST] key to enter Test mode.
To quit Test mode, press the [ESC] key.

2) Description of various Test modes

2-1) FAN Test mode ([CX] - [0] to [7], [9])

After entering Test mode, press the [CX] key to enter FAN Test mode, then press a numeric key corresponding to a fan (fans) to be tested. The fans that can be tested are two fans in the front section and one fan in the rear section (a fan not used for the power-supply block).

[0]: All fans ON
[1]: All fans OFF
[2]: Left fan in the front section ON (the other fans retain their previous statuses.)
[3]: Left fan in the front section OFF (the other fans retain their previous statuses.)
[4]: Right fan in the front section ON (the other fans retain their previous statuses.)
[5]: Right fan in the front section OFF (the other fans retain their previous statuses.)
[6]: The fan in the rear section ON (the other fans retain their previous statuses.)
[7]: The fan at the rear section OFF (the other fans retain their previous statuses.)
[9]: Terminating FAN Test mode

2-2) LED/FL Test mode ([P.RUN] - [0] , [1] , [2])

After entering Test mode, press the [P.RUN] key to enter LED/FL Test mode:

[0]: Terminating LED/FL Test mode
[1]: Lighting all LEDs and FLs
[2]: Distinguishing all LEDs and FLs

2-3) Front-Panel-Button-Input Test mode ([TV/LDP])

After entering Test mode, press the [TV/LDP] key to enter Front-Panel-Button-Input Test mode then press all the buttons on the front panel one by one. The segments on the FL display are also extinguished one by one. When all buttons on the front panel are pressed, all segments except for the three on the right (two in a case of the 2-drive unit) are extinguished. When pressing the [STANDBY/ON] button, do NOT hold it pressed. Otherwise, the unit will be turned off. When pressed, some buttons may activate their corresponding operations.

[0]: Terminating Front-Panel-Button-Input Test mode

2-4) System-Information-Display Test mode ([REP.A] - [0] , [1] to [9])

After entering Test mode, press the [REP.A] key to display data on the hardware.

[0]: Terminating System-Information-Display Test mode

[1]: Main

CPU : The data (operation clock) on the mounted CPU can be checked.

Memory : The capacity of installed memory can be checked.

User Data : The total vacant capacity in the User Data area on the HDD can be checked. This vacant capacity is different from that displayed in normal operation.

PCI : Whether the Encoder board or Decoder board can be recognized by Linux or not can be checked. Being recognized does not mean that the boards are operable, but if not recognized, the boards may have some trouble.

[2]: USB (The connected USB devices will be displayed.)

IMPORTANT: During the USB Test, if a connected USB device, such as a mouse, is operated, the unit may hang up. Do NOT operate a connected USB device during the USB Test.

[3]: Network

IP Address/Netmask/MAC Address

If Network is set to ON on the Function menu, the IP address can be confirmed. If it is not set to ON, "!!!!!NO ID ADDRESS!!!!!" is displayed.

10 base/100 base

The connection conditions of the network (Ethernet) can be confirmed:
No Link: No connection to the network
10base T: The 10BaseT standard is used. (This indication is also displayed when the hub used does not support 100Base.)
100base Tx-FD: The 100Base standard is used.

[4]: HDD (IDE Primary-Master)

Data on the HDD. The SMART data are also confirmed.

[5]: HDD (IDE Primary-Slave)

Normally, no data are displayed.

[6]: DVD-R/RW Drive 1

The data on Drive 1 are displayed.

[7]: DVD-R/RW Drive 2

The data on Drive 2 are displayed if it is connected.

[8]: DVD-R/RW Drive 1 error log

The error log for Drive 1 is displayed.

[9]: DVD-R/RW Drive 2 error log

The error log for Drive 2 is displayed if it is connected.

2-5) Loopback Test mode ([REP.B] - [0] , [1] to [4])

After entering Test mode, press the [REP.B] key to enter Loopback Test mode for the RS-422A and RS-232C ports:

[0]: Terminating Loopback Test mode

[1]: Starting the RS-422A Loopback Test

[2]: Starting the RS-232C Loopback Test

[3]: Starting the RS-422A Loopback Test (but stopping when an error is generated)

[4]: Starting the RS-232C Loopback Test (but stopping when an error is generated)

2-6) Clearing data on cumulative power-on time, etc. ([A.MON] - [0] , [1] , [7], [8] , [9])

After entering Test mode, press the [A.MON] key to enter Test mode for clearing data on cumulative power-on time, etc.:

[0]: Clearing cumulative time for accessing to the HDD
[1]: Clearing cumulative power-on time of the product (Cumulative time of accessing the HDD is not cleared.)
[7]: Preparing to download the Setup file (obtainable via FTP for users)
[8]: Copying the Setup file (obtainable via FTP for users)
[9]: Copying the Log file (obtainable via FTP for users)

2-7) Error-Rate-Measurement Test mode ([PLAY])

After entering Test mode, insert a disc and press the [PLAY] key to enter Error-Rate-Measurement Test mode for Drive 1.
For measurement for Drive 2, press the [2] key. Measurement starts from address 0. To change the address for measurement, use [SCAN F] or [SCAN R].

[SCAN F]: Advancing the address for measurement by 0x10000
[SCAN R]: Setting the address for measurement back by 0x10000
[1]: Starting measurement for Drive 1
[2]: Starting measurement for Drive 2
[OP/ST]: Terminating measurement

2-8) Test mode with result (OK/NG) displayed ([0] , [1] to [7])

After entering Test mode, press one of the numeric keys. The corresponding test will be performed and the result (OK/NG) is displayed.
To proceed to the next test and clear the OK/NG result, press the [CLEAR] key.

[0]: Consecutive testing of [1] - [4] below (Testing stops when the test result becomes NG.)
[1]: RS-422A Loopback Test
Perform this test after connecting the IN and OUT RS-422A ports with a cable.
[1]: RS-232C Loopback Test
Perform this test after connecting the jig for loopback testing to the RS-232C port.
[3]: LAN Test
Perform this test after connecting the unit to the valid network with a LAN cable.
[4]: USB Test
Perform this test after connecting keyboards or mice to all the USB ports on the front and rear panels.
[5]: Error Rate Test (Drive 1)
Perform this test after loading a disc into Drive 1.
[6]: Error Rate Test (Drive 2)
Perform this test after loading a disc into Drive 2.
[7]: LTC display
The LTC being input is displayed on the FL display. In this mode, OK/NG judgment is not performed.
[CLEAR]: (When entered after one of the above test) To clear the result display

Note: About error-rate measurement, see the note on it in "7.1.2 List of Codes in Test Mode."

2-9) How to copy the Setup file to another PRV-LX10

① On a PRV-LX10 (hereinafter referred to as the PRV-LX10(S)) whose Setup file is to be copied, execute the command for copying the Setup file in Test mode for clearing data on cumulative power-on time, etc. ([ESC]-[TEST]-[A.MON]-[8]). See "2-6 Clearing data on cumulative power-on time, etc.".
② With a PC that is connected with the PRV-LX10(S) through a network, log in on the FTP server as described in the instruction manual (User name: PRVUser, password: prv-lx1). Then copy the Setup file (system.xml) from the first-layer directory.
③ Connect the PRV-LX10 (hereinafter referred to as the PRV-LX10(D)) that will receive the copied Setup file with the PC used in Step 2 above, through a network. Then log in on the FTP server (User name: PRVUser, password: prv-lx1) in the same way as in Step 2. Move the Setup file copied in Step 2 to the first-layer directory of the FTP server.
④ Execute the command for preparing for downloading the Setup file in Test mode for clearing data on cumulative power-on time, etc. ([ESC]-[TEST]-[A.MON]-[7]). See "2-6 Clearing data on cumulative power-on time, etc.".
⑤ Turn off the power to the PRV-LX10(D).
⑥ Turn on the power to the PRV-LX10(D) again. The new Setup file will be applied.

7.1.2 TEST MODE CODE

With the aid of the GGF1067 remote control unit for service, Test mode is operated.

No.	Code Input			Operation/Usage	Remarks
1	[ESC]+[TEST]			TEST MODE	
2		[CX]		FAN TEST MODE	
3			[0]	All fans ON	
4			[1]	All fans OFF	
5			[2]	Left FAN ON	
6			[3]	Left FAN OFF	
7			[4]	Right FAN ON	
8			[5]	Right FAN OFF	
9			[6]	Rear FAN ON	
10			[7]	Rear FAN OFF	
11			[9]	Terminating	
12		[P.RUN]		LED/FL TEST	
13			[0]	All LEDs/FLs lit	
14			[1]	All LEDs/FLs extinguished	
15			[2]	Terminating	
16		[TV/LDP]		Starting Front-Panel-Button-Input Test mode	Each time a button on the front panel is pressed, one segment on the FL display is extinguished.
17			[0]	Terminating	
18		[STEREO]+[8]		Drive 1 Region display	
19		[STEREO]+[9]		Drive 2 Region display	Effective when an optional drive is mounted
20		[REP.A]		System information display	
21			[0]	Terminating	
22			[1]	Main system information display	Built-in CPU (operation clock), capacity of the installed memory devices, vacant HDD capacity for User Data, recognition of PCI Boards (Encoder/Decoder)
23			[2]	USB-related data display	Data on the connected devices
24			[3]	Network-related data display	When Network is set to ON: Confirmation of IP address/Netmask/MAC address display, connection conditions (No Link/10BaseT/100Base Tx-FD)
25			[4]	Primary Master Drive data display	HDD SMART data display
26			[5]	Primary Slave Drive data display	Normally, no drive connected
27			[6]	Secondary Master Drive data display	
28			[7]	Secondary Slave Drive data display	Effective when an optional drive is mounted
29			[8]	Drive 1 error log	
30			[9]	Drive 2 error log	Effective when an optional drive is mounted
31		[REP.B]		Loopback TEST	
32			[0]	Terminating	
33			[1]	RS-422A Loopback TEST	
34			[2]	RS-232C Loopback TEST	
35			[3]	RS-422A Loopback TEST (Error Stop)	
36			[4]	RS-232C Loopback TEST (Error Stop)	
37		[A.MON]		Power On Time Clear	
38			[0]	HDD Access Time	
39			[1]	Power On Time	
40			[7]	Preparing to download the Setup file	Obtainable via FTP for users
41			[8]	Copying the Setup file	Obtainable via FTP for users
42			[9]	Copying the Log file	Obtainable via FTP for users
43		[PLAY]		Error Rate TEST	
44			[SCAN F]	+0x10000	
45			[SCAN R]	-0x10000	
46			[1]	Starting measurement for Drive 1	
47			[2]	Starting measurement for Drive 2	
48			[OP/ST]	Terminating measurement	
49		[0]		External I/F TEST (NG STOP)	Consecutive testing from 1 to 4
50		[1]		RS-422A Loopback TEST	REMOTE IN-OUT connection
51		[2]		RS-232C Loopback TEST	TXD-RXD connection
52		[3]		LAN TEST	DHCP setting, obtaining an IP address

No.	Code Input		Operation/Usage	Remarks
53		[4]	USB TEST	USB devices must be connected to four ports. Do not operate the connected USB devices during the USB test. For example, if the connected mouse is operated during the USB test, the unit may hang up.
54		[5]	Error Rate TEST (Drive 1)	The error rate is measured at 0x30000 three times, and the average value is judged. The command must be input during playback stop. ROM: Th value 3.3x10E-3 R, RW: Th value 3.3x10E-3
55		[6]	Error Rate TEST (Drive 2)	Effective when an optional drive is mounted
56		[7]	LTC display	Input TC is displayed on the FL display
57		[CLEAR]	Terminating result display	
58		[ESC]	Canceling Test mode	
59	[ESC+[PAUSE]		Shortcut command	
60		[1]	V IN- Composite	
61		[2]	V IN-S	
62		[3]	V IN-Component (Beta)	
63		[4]	V IN-Component (SMPTE)	
64		[5]	V IN-DV	
65		[6]	V IN-SDI	Effective when an optional board is mounted
66		[7]	A IN-RCA	
67		[8]	A IN-XLR	
68		[9]	A IN-DV	
69		[0]	A IN-SDI	Effective when an optional board is mounted
70		[+10]	A IN-AES/EBU	Effective when an optional board is mounted
71		[TEST]	Target DRV - HDD	
72		[CX]	Target DRV - DVD 1	
73		[REP.A]	Target DRV - DVD 2	Effective when an optional board is mounted
74		[REP.B]	Target DRV - DVD 1 & 2	Effective when an optional board is mounted
75		[STEREO]	External Sync. OFF	Effective only during playback or recording stop
76		[P.RUN]	External Sync. NTSC	Effective only during playback or recording stop
77		[A.MON]	External Sync. PAL	Effective only during playback or recording stop
78		[SPEED-]	Progressive OFF	Effective only during playback or recording stop
79		[SPEED+]	Progressive ON	Effective only during playback or recording stop
80		[SIDE.A]	TC PORT - LTC	
81		[SIDE.B]	TC PORT - RS-422A	
82		[TV/LDP]	TC PORT - DV	
83		[SCAN.F]	DV OUT ON	
84		[SCAN.R]	DV OUT OFF	
85		[x3 FWD]	REC	
86		[x3 REV]	REC STOP	
87		[STEP F]	Initialize	
88		[STEP R]	Finalize	
89	[ESC]+[OPEN/STOP]		Open/Close	
90	[ESC+[DISP]		Display of data for debugging-Page 1: System data	
91		[DISP]	To next page	Page 1: DVD-playback-related data, FAN/PS-ON operation data, destination/region data (DECB/DRV1/DRV2), GUID data Page 2: DVD-playback-related data Page 3: Decoding-related data (DECB) Page 4: Encoding-related data (PCIB/AVIB) Page 5: Encoding-related data (APL) Page 6: Linux-related data

- How the [ESC] code is processed
  - When the [ESC] code is received, ESCAPE mode is entered, but in combination with the code(s) that follow(s), a specific meaning is added.
  - ESCAPE mode is canceled if another code is received after the [ESC] code.
  - If [ESC] codes are received continuously, ESCAPE mode is retained.
- For playback-related operations, use the remote control unit supplied with the main unit.
- The factory preset mode of the unit at power-on is Standby. To start up the unit, press the [STOP] button, then press the [STANDBY/ON] button while in Standby mode.
- If the error rate being measured is distinctly degraded because of scratches on the media or defective media, a command cannot be sent from the drive, and proper error-rate-measurement may not be performed. If an error rate is not displayed, or OK/NG is not displayed on the monitor, restart the PRV-LX10 (by resetting the drive) and perform the error-rate-measurement again.

7.1.3 LED SPECIFICATIONS

■ LED specifications

Assy	ST LED	Function		Operation while the LED is lit/remarks	Checker Chip	Monitor Point
PWRB(POLY) Assy (DWZ1129)	D9	HDD_IND	HDD access indicator	In the process of accessing the HDD	–	
	D10	V+5VSB	Confirming STB +5 V power supply	Outputting +5 VSB from ATX power supply		
	D11	V+5V	Confirming +5 V power supply	Outputting +5 V from ATX power supply		
	D12	V+3.3VD	Confirming +3.3 V power supply	Outputting +3.3 V from IC201		
	D13	V+2.5VD	Confirming +2.5 V power supply	Outputting +2.5 V from IC101		
	D19	V+5VSB_M	Confirming STB +5 V power supply for MB	Outputting +5 VSB from RY1		
	D24	FAN DET	Confirming fan operation	STB or normal operation (rotation) of fans A fan being stopped by the fan control signal is not detected. Without an optional drive: Monitoring the rear fan and the fan for Drive 1 With an optional drive: Monitoring the rear fan and the fans for Drives 1 and 2		
	D25	PS_ON	Confirming PS_ON signal from the MB output	STB, or MB output set to H When D25 is lit, D11/12/13 are not lit (ATX power output disabled) Sequences: 1. When the Power switch on the rear panel is turned ON, D10, D24, and D25 light. 2. When the STANDBY/ON button on the front panel is set to ON, D19 lights, D25 is extinguished, D11, D12, and D13 light, then USBB D681 lights.		
FLKB(WYV/RB) Assy	–				–	
KEYB(WYV/RB) Assy	–				–	
USBB Assy (DWZ1159)	D681	USB_PWR	Confirming the power supply to USBB	Outputting +5 V from PWRB RY2, supplying USB_PWR to USB terminals on the front panel	–	
DRV1B Assy (DWZ1160)	–				–	
DRV2B Assy (DWZ1161)	–				–	
JKIB Assy (DWZ1126)	D7619	V+9V	Confirming +9 V supply for video	Outputting +9 V from AVIB IC3201	–	
	D7620	V+9A	Confirming +9 V supply for audio	Outputting +9 V from AVIB IC3203		
	D7621	V-9A	Confirming -9 V supply for audio	Outputting -9 V from AVIB IC3204		
	D7622	V+5A	Confirming +5 V supply for video	Outputting +5 V from AVIB IC3202		
JKOB Assy (DWZ1127)	–				–	
HPVB Assy (DWZ1128)	D661	V+5HP	Confirming +5 V supply	Outputting +5 V from JKIB IC7711	–	
422IBAssy (DWZ1133)	–				–	
JKDB Assy (DWZ1134)	D7925	V+12_LTC	Confirming +12 V supply for LTC	Outputting +12 V from MB via PCIB	–	
	D7926	V-12_LTC	Confirming -12 V supply for LTC	Outputting -12 V from MB via PCIB		
	D7927	V+5D	Confirming +5 V supply	Outputting +5 V from MB via PCIB		

<table>
<tr><th>Assy</th><th>ST LED</th><th colspan="2">Function</th><th>Operation while the LED is lit/remarks</th></tr>
<tr><td rowspan="13">PCIB Assy (DWP1080)</td><td>D2101</td><td>V-12V</td><td>Confirming PCI-12 V supply</td><td>Outputting -12 V from MB</td></tr>
<tr><td>D2102</td><td>V+12V</td><td>Confirming PCI+12 V supply</td><td>Outputting +12 V from MB</td></tr>
<tr><td>D2301</td><td>V+5M</td><td>Confirming PCI+5 V supply</td><td>Outputting +5 V from MB, normal operation of TH2351 (Poly switch)</td></tr>
<tr><td>D2304</td><td>FPGA_ACTIVE</td><td>Confirming Xilinx operational status</td><td>Default: lit (Config. completed), during Master transmission: flashing</td></tr>
<tr><td>D2305</td><td>PTD [0]</td><td>Confirming encoder operational status (0)</td><td rowspan="13">Error display on startup
<table><tr><th>Device check</th><th>[3] [2] [1] [0]</th></tr><tr><td>No error</td><td>0000</td></tr><tr><td>PCIB Xilinx (IC2309)</td><td>0001</td></tr><tr><td>AVIB Xilinx (IC5004)</td><td>0010</td></tr><tr><td>reserved</td><td>0011</td></tr><tr><td>SDRAM (IC2404)</td><td>0100</td></tr><tr><td>Slalom (IC2001)</td><td>0101</td></tr><tr><td>Slalom SDRAM (IC2003)</td><td>0110</td></tr><tr><td>George (IC3502)</td><td>0111</td></tr><tr><td>Vaikilt (IC5002)</td><td>1000</td></tr><tr><td>Aprilia (IC6003)</td><td>1001</td></tr><tr><td>Celynx (IC4001)</td><td>1010</td></tr></table>Notes:
• When encoding starts after the device check, the LED display changes to the encode debugging display.
• If errors are generated simultaneously for several devices, the error of the highest-priority device is displayed.</td></tr>
<tr><td>D2306</td><td>PTD [1]</td><td>Confirming encoder operational status (1)</td></tr>
<tr><td>D2307</td><td>PTD [2]</td><td>Confirming encoder operational status (2)</td></tr>
<tr><td>D2308</td><td>PTD [3]</td><td>Confirming encoder operational status (3)</td></tr>
<tr><td colspan="3"></td></tr>
<tr><td colspan="3"></td></tr>
<tr><td colspan="3"></td></tr>
<tr><td colspan="3"></td></tr>
<tr><td colspan="3"></td></tr>
<tr><td colspan="3"></td></tr>
<tr><td colspan="3"></td></tr>
<tr><td rowspan="15">DECB Assy (DWP1081)</td><td>D1137
D1181</td><td>V+SH3
PTD [0]</td><td>Confirming +1.8V-supply for SH3</td><td>Outputting +1.8 V from IC1121
During normal operation:
<table><tr><td>During playback</td><td>Randomly lit</td></tr><tr><td>During stop</td><td>All LEDs extinguished</td></tr></table>Error Status:
<table><tr><td>Failure in writing to flash</td><td>All LEDs lit</td></tr><tr><td>Xilinx configuration error</td><td>All LEDs flashing (at intervals of 1 sec)</td></tr><tr><td>SH SDRAM error</td><td>D1181 lights.</td></tr><tr><td>Video encoder Initialize error</td><td>D1182 lights.</td></tr><tr><td>AV1 initialize error</td><td>D1185 lights.</td></tr><tr><td>AV1 SDRAM error</td><td>D1186 lights.</td></tr></table>Default: Lit (Config. completed), during transmission of SH3-AV1 data: flashing, then extinguished when Xilinx is written to the FIFO stack, and lit when the stack is empty (FIFO EMPTY).</td></tr>
<tr><td>D1182</td><td>PTD [1]</td></tr>
<tr><td>D1185</td><td>PTD [2]</td></tr>
<tr><td>D1186</td><td>PTD [3]</td></tr>
<tr><td colspan="2"></td><td>Confirming DECB operational status</td></tr>
<tr><td>D1311</td><td>FPGA ACTIVE</td><td>Confirming Xlinx operational status</td></tr>
<tr><td colspan="3"></td></tr>
<tr><td colspan="3"></td></tr>
<tr><td colspan="3"></td></tr>
<tr><td colspan="3"></td></tr>
<tr><td colspan="3"></td></tr>
<tr><td colspan="3"></td></tr>
<tr><td colspan="3">

Assy	ST LED	Function		Operation while the LED is lit/remarks
AVIB Assy (DWV1202)	D3201	V+12I	Confirming +12 V supply	Outputting +12 V from PWRB
	D3202	V+5DI	Confirming +5 V supply	Outputting +5 V from PWRB, normal operation of IC3205 (ICP-S2.3)
	D3203	V+3_3I	Confirming +3.3 V supply	Outputting +3.3 V from PWRB
	D3204	V+2_5I	Confirming +2.5 V supply	Outputting +2.5 V from PWRB
	D5001	ENC OK	Confirming Xlinx operational status	Default: lit (Config. completed), during ENC operation: flashing
	D5002	WMKD7	Confirming encoder operational status (3)	Error indications at startup are the same as for PCIB D2305-D2308.
	D5003	WMKD6	Confirming encoder operational status (2)	
	D5004	WMKD5	Confirming encoder operational status (1)	
	D5005	WMKD4	Confirming encoder operational status (0)	

Checker Chip	Monitor Point
–	

Announcement functions of the LED and buzzer

Item	Function		Description	Remarks
Buzzer				
1	Protection of the HD boot sector		Protection of the HD boot sector (security function against computer viruses)	The warning message is displayed, with repeated peep sound.
2	Video error		This code indicates that a video error was generated. The BIOS cannot initialize the video screen for displaying additional data.	Following two peeps, a single beep sounds.
3	DRAM error		This code indicates that a DRAM error was generated.	Repeated beeps sound.
LED				
1	Power LED	S0 mode	LED ON	
		S1 mode	The LED flashes at a 1-Hz rate.	The LED flashes once per second.
		S3 mode	The LED flashes at a 1-Hz rate.	The LED flashes once per second.
		S4 mode	LED off	
		S5 mode	LED off	
2	HDD LED		The LED flashes.	The LED flashes while the data are being accessed (read/write).
3	RJ45 LED	100M	Green LED ON	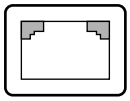 1 2 3 6
		10M	Green LED OFF	
		Link	Yellow LED flashes	
		Active	Yellow LED ON	

No.	Signal
1	TD+
2	TD-
3	RX+
6	RX-

ST LED arrangement diagram of the PCIB and DECB Assys

Note: Be careful to wiring of the DKP3640 (Connector Assy 4P) because there is the case that cannot see LED.

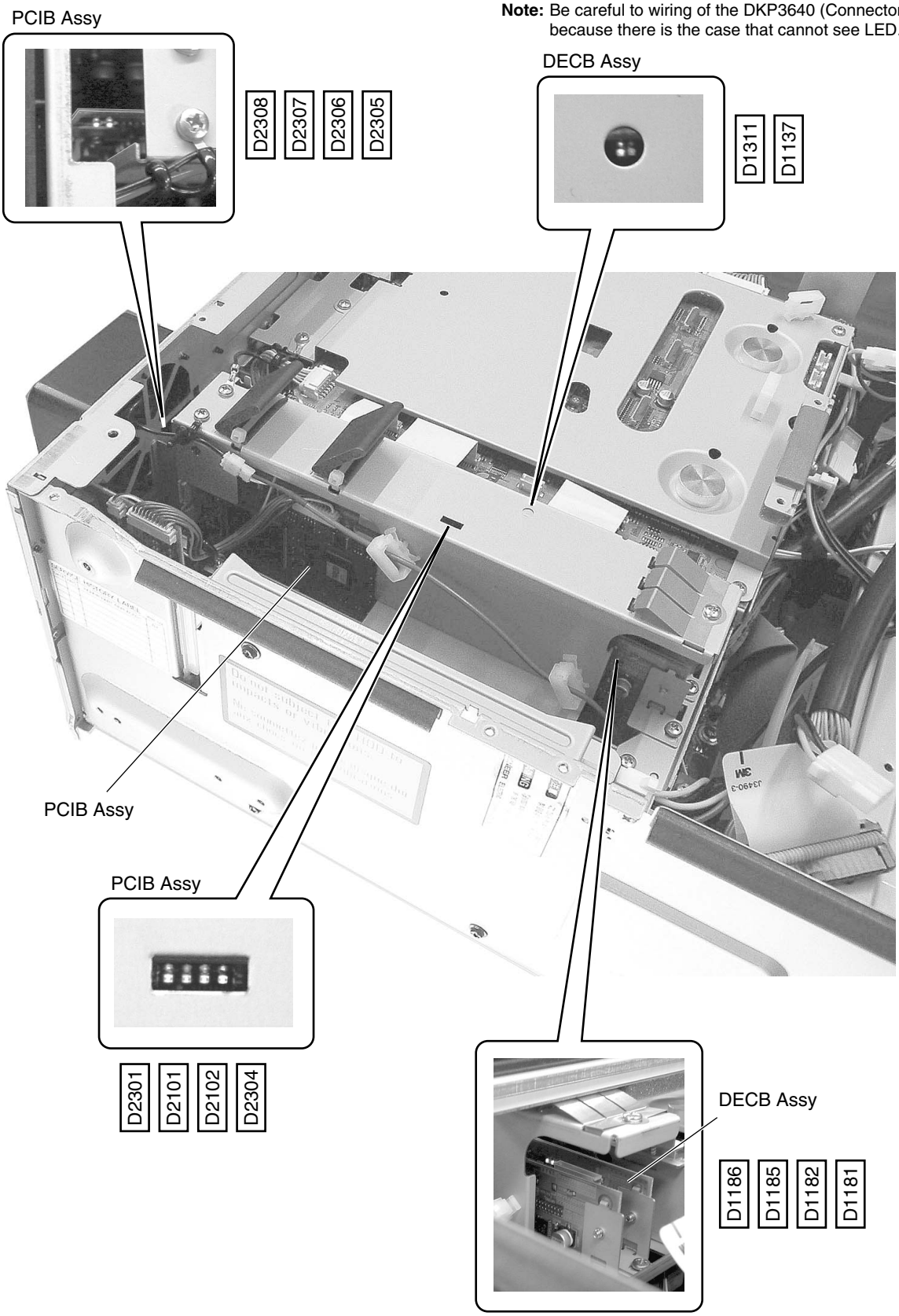

■ ST LED arrangement diagram of the JKIB, AVIB, JKDB, HPVB, PWRB(POLY) and USBB Assys

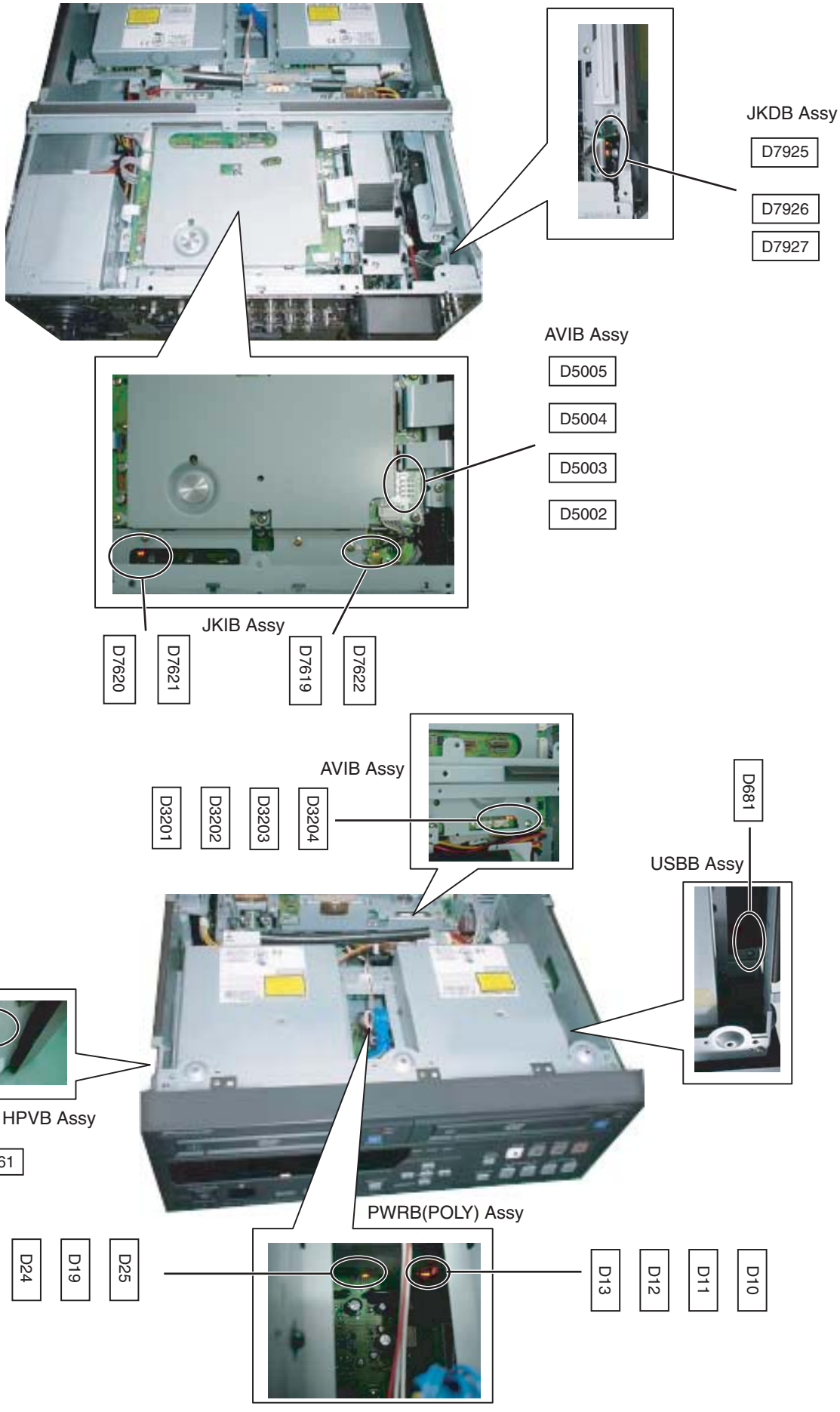

7.1.4 POWER-ON SEQUENCE

Operation *1	FL Display (left)	FL Display (right)	Video Output	VGA Output
Power on	POWER	--ON--	–	–
Starting BIOS	PLEASE	WAIT	Start of opening logo display	BIOS startup screen
Searching for the drive to be started *2				
(Starting from HDD)				
Running boot loader				
Starting kernel				Start of opening logo display
Starting execution of startup script, successful communication with Front-panel-microcomputer	POWER-ON	=		
Starting checking Root file system *3	POWER-ON	==		
Completion of checking root file system	POWER-ON	===		
Completion of remounting root file system	POWER-ON	====		
Checking other file systems *4	POWER-ON	FSCK		
	POWER-ON	FSCK-HOME		
	POWER-ON	FSCK-VAR		
	POWER-ON	FSCK-RECVER		
	POWER-ON	FSCK-DATA		
Completion of mounting file systems	POWER-ON	=====		
Completion of sorting out file systems	POWER-ON	======		
Completing all the following initialization processes for the Recorder: • Initialization for each destination • Checking the region code • Updating "poweron.log" • Checking the PCI board *5 • Checking the firmware version *6 • Disposal of unnecessary files	POWER-ON	=======		
Starting initialization of the network *7	POWER-ON	========		
Completing initialization of the network	POWER-ON	=========		
Initializing the system log	POWER-ON	==========		
Completing initialization processes	POWER-ON	==========	End of opening logo display	End of opening logo display
Starting the application *8	00 : 00 : 00 : 00	00 : 00 : 00 : 00	Black or blue screen	Screen with an X-shape mouse pointer
Completing startup of application			Throughout, or black or blue screen	PRV-LX10 logo display

*1: The displays indicated in the FL-display, video-output, or VGA-output columns are to be displayed at the point when each corresponding operation finishes.

*2: In the BIOS, the HDD is programmed to be the first drive to be started. If the HDD cannot be recognized as a startup drive because of a defect, etc., the following message is displayed on the VGA output:

DISK BOOT FAILURE, INSERT SYSTEM DISK AND PRESS ENTER

In this case, check the connections at the HDD connector block. If there is any loose connection, turn off the power and clear the CMOS data (by changing the position of JP14). If this does not improve the situation, reinstall the OS.
If OS reinstallation is impossible, replace the HDD then install the OS.

*3: If an error is detected during root-file-system check, automatic restoration is performed. In this case, the indications on the FL displays change as follows:

Operation	FL Display (left)	FL Display (right)
Error detection	POWER-ON	ROOT-ERROR
Executing reboot for restoration	POWER-ON	ROOT-ERROR
Rebooting starts	START	RECVER=
In the process of restoration	START	RECVER== ~ RECVER====
Completing restoration	START	RECVER=====
Restarting booting	START	RECVER=====

If automatic restoration is repeatedly executed, reinstall the OS.
After automatic restoration is executed, the following sentence is added to the log file:

!!!!!! The root file system has been recovered !!!!!!!!

*4: If an unrecoverable error exists in another file system, one or more messages, as indicated below, will be displayed on the FL displays.

FL Display (left)	FL Display (right)
FSCK-ERROR	BOOT/USR
FSCK-ERROR	HOME
FSCK-ERROR	VAR
POWER-ON	FSCK-ERROR

Although the system can be started up even after the above messages are displayed, reinstall the OS anyway, because the system may be unstable. (In this case, an installation leaving the user data intact will suffice.)

*5: If the Encoder or Decoder board cannot be detected at startup, restarting is automatically executed. If the board cannot be detected for a second time, the application program will not be started. One of the following will be displayed on the FL displays:

Operation	FL Display (left)	FL Display (right)
In a case when the Encoder board could not be detected	-NO-BOARD-	ENCODER
In a case when the Decoder board could not be detected	-NO-BOARD-	DECODER

In this case, the following sentences are added to the log files:

Error displays for the Encoder board:
First error display : **!!!!!!!!!! NO ENCODER BOARD ERROR (REBOOT) !!!!!!!!!!**
Second error display : **!!!!!!!!!! NO ENCODER BOARD ERROR AGAIN !!!!!!!!!!**
(If this is displayed, the unit was not started)

Error displays for the Decoder board:
First error display : **!!!!!!!!!! NO DECODER BOARD ERROR (REBOOT) !!!!!!!!!!**
Second error display : **!!!!!!!!!! NO DECODER BOARD ERROR AGAIN !!!!!!!!!!**
(If this is displayed, the unit was not started)

*6: Whether or not the firmware versions for the Encoder board, Decoder board, and drive are identical to those of the application software is checked. If not identical, the application will not start up. Inconsistency of versions may result in most cases after replacing the above parts for repair. In such a case, install the latest firmware program.

*7: Initialization of the network is not executed if Network is not set to Enabled on the Function menu. If the network cable is not connected, initialization of the network is not executed even if Network is set to Enabled. If the DHCP server does not exist even if DHCP is assigned in the network setting, the startup time will be delayed more than 30 seconds.

*8: Normally, the application starts up. However, in the following cases, the application does not start up:

① When the Encoder or Decoder board could not be detected
In this case, "-NO-BOARD-DECODER" or "-NO-BOARD-ENCODER" is displayed on the FL display, and only the STANDBY/ON button will be active.

② When the firmware version for the Encoder board, Decoder board, or drive is not identical to that in the application software
In this case, "ERROR FIRM-VERSION" is displayed on the FL displays, and only the [STANDBY/ON] button will be active. This may result after replacing the PCI board with one having the old firmware when repairing. In this case, press the [STANDBY/ON] button while holding the [ENTER] button on the front panel pressed, and install the latest firmware program.

③ When the [STANDBY/ON] button is pressed while the [ENTER] button on the front panel is held pressed, Program-Install mode is activated. In this case, "PGM-INSTALL" is displayed on the FL displays.

④ If the region set for the drive is different from the destination setting for the unit, Region-Resetting mode is activated. In this case, "CHANGE-RGN" is displayed on the FL displays.

7.1.5 HOW TO CHECK THE ERROR LOG

The PRV-LX10 is provided with a log file in which the data at the point when the power is turned on are stored. In the log file, the number of times the power is turned on, time when the power is turned on and off, and error data can be checked.

■ How to check the log file

Note: • If user settings have been made, return the settings to the original ones after servicing.
• Please copy a Log file beforehand. (Refer to " [9]: Copying the Log file of 2-6 Clearing data on comulative power-on time, etc." on page 119.

1) Perform the setting for the network. (An example is shown below, but the connection is possible in a different way.)
① Make preparations for the PC.
Make the network settings for the PC, assigning the IP address as indicated below:
IP address : 192.168.0.15
Subnet mask : 255.255.255.0
Gateway : 192.168.0.1

② Turn off the PC.

③ Make the manual settings for the network of the PRV-LX10 on the Function menu (then selecting System, then Network).
IP address : 192.168.0.16
Subnet mask : 255.255.255.0
Gateway : 192.168.0.1

④ Turn off the PRV-LX10.
⑤ Connect the PRV-LX10 and the PC directly, using an Ethernet cross cable.
⑥ Turn on the PRV-LX10 and the PC.

2) Open the log file using a Web browser (IE, etc.).
Using the Web browser on the PC, access:

ftp://192.168.0.16

Enter the following user name and password:

User : DVDRecService
Password : DVDRecService

Open the "poweron.log" or "service_info.jog" file using the Web browser.

■ Details on the log file

The log file consists of the following items:

```
POWER-ON=7 ◄──────────────────────────────────────────────①
1 : Power On : Mon Jun 23 21:19:26 EDT 2003 ◄─────────────②
Shimuke=x, Region=x,x,x PowerOnKey=xxxxx
ENC OK(2.253.0.0/2.253.0.0) •••••• ===== VERSION CHECK OK ===== ◄──⑧
Power Off : Mon Jun 23 22:12:16 EDT 2003 ◄────────────────③
2 : Power On : Tue Jul 8 10:10:12 EDT 2003 ◄──────────────②
Shimuke=x, Region=x,x,x PowerOnKey=xxxxx
ENC OK(2.253.0.0/2.253.0.0) •••••• ===== VERSION CHECK OK ===== ◄──⑧
3 : Power On : Tue Jul 8 10:12:32 EDT 2003 ◄──────────────②
Shimuke=x, Region=x,x,x PowerOnKey=xxxxx
----- Found a power failure in the previous power on ----- ◄──④
ENC OK(2.253.0.0/2.253.0.0) •••••• ===== VERSION CHECK OK ===== ◄──⑧
Power Off : Tue Jul 8 10:15:16 EDT 2003 ◄──────────────────③
4 : Power On : Tue Jul 8 14:10:22 EDT 2003 ◄──────────────②
Shimuke=x, Region=x,x,x PowerOnKey=xxxxx
!!!!!! The root file system has been recovered !!!!!!!! ◄──⑤
ENC OK(2.253.0.0/2.253.0.0) •••••• ===== VERSION CHECK OK ===== ◄──⑧
Power Off : Tue Jul 8 14:12:16 EDT 2003 ◄──────────────────③
5 : Power On : Tue Jul 8 15:10:22 EDT 2003 ◄──────────────②
Shimuke=x, Region=x,x,x PowerOnKey=xxxxx
ENC OK(2.253.0.0/2.253.0.0) •••••• ===== VERSION CHECK OK ===== ◄──⑧
!!!!!! NO DECODER BOARD ERROR (REBOOT) !!!!!!!! ◄──⑥
6 : Power On : Tue Jul 8 16:10:22 EDT 2003 ◄──────────────②
Shimuke=x, Region=x,x,x PowerOnKey=xxxxx
ENC OK(2.253.0.0/2.253.0.0) •••••• ===== VERSION CHECK OK ===== ◄──⑧
!!!!!! NO DECODER BOARD ERROR AGAIN !!!!!!!! ◄──⑦
   !!!!!<<<<<PCI Access Error Count=1>>>>>(Date)Tue Jul 8 16:12 11 EDT 2003 ◄──⑨
Power Off : Tue Jul 8 16:12:16 EDT 2003 ◄──────────────────③
7 : Power On : Tue Jul 8 18:10:22 EDT 2003 ◄──────────────②
Shimuke=x, Region=x,x,x PowerOnKey=xxxxx
ENC OK(2.253.0.0/2.253.0.0) •••••• ===== VERSION CHECK OK ===== ◄──⑧
```

① Number of times the power was turned on since recording of the log file started (normally, after shipment).
In the example above, the unit was turned on 7 times.
② Date and time the power was turned on
③ Date and time the power was turned off
④ This message indicates that the previous power-off process was not completed normally. If this message appears many times, it is suspected that the HDD is damaged. The user should be urged to turn off the unit using the STANDBY/ON button on the front panel. The user should even be urged to use the UPS (uninterruptible power supply), depending on the power-supply conditions.
⑤ This message indicates that the root file system was damaged because of inappropriate interruption of the power supply, etc., and that automatic restoration has been performed to retry to start up the root file system. This itself does not pose a problem, because restoration has been completed, but if this often occurs, the following problems are suspected:
(1) Because of the poor power-supply conditions on the user's side, sudden power interruptions occurred while the unit was in operation.
(2) Because the HDD was in poor conditions, sometimes files were not read properly.
⑥ This message indicates that the Decoder board was not detected on the first try. In this case, the unit is automatically rebooted, and the unit retries detection of the Decoder board. If this occurs many times, the Decoder board may be defective.
⑦ This message indicates that the Decoder board was not detected on the second try. The application is not started, the error message is displayed on the FL displays, and only the STANDBY/ON button is active. If this occurs many times, the Decoder board may be defective.
⑧ This is the result of confirmation of whether the versions of the firmware and the application program are identical or not. If the result is not OK, the application program will not start up. Reinstall, using the correct version of the program.
⑨ If errors are generated on the PCI bus, the total number of errors detected while the power is on is recorded when the power is turned off. Unlike the service_info.log mentioned below, where error data are recorded as soon as an error is generated, in this log, the total number of errors detected is recorded, if any, when the power is turned off.

■ Details on the log file (service_info.log)

In the service_info.log file, detailed data on Service Info, which can be accessed by selecting Function Menu, System, Information, then Service Info, are recorded, as shown below:

```
<<<<< Start PRV-LX10 >>>>>   Mon Oct 20 06:25:22 EDT 2003 ←①
 -- HDD SMART:Val(Max)/Thrsh --<<Spare Sector>> fd(fd)/3f  <<Sk ErrRate>> fd(fc)/00
<<Spdl Mtr Retry>> fd(fc)/9d <<W ErrRate>> fd(fc)/00 Lecel=0 ←②
 !!!!!<<<<< PCI Access Error Count = 1  >>>>> (Date) Mon Oct 20 06:25:51 EDT 2003 ←③
 !!!!!<<<<< PCI Access Error Count = 2  >>>>> (Date) Mon Oct 20 06:27:23 EDT 2003 ←③
 <<Check HDD SMART Data>>:Mon Oct 20 06:28:15 EDT 2003 ←④
 -- HDD SMART:Val(Max)/Thrsh --<<Spare Sector>> fd(fd)/3f  <<Sk ErrRate>> fd(fc)/00
<<Spdl Mtr Retry>> fd(fc)/9d <<W ErrRate>> fd(fc)/00 Lecel=0 ←④
<<<<< Start PRV-LX10 >>>>>   Mon Oct 20 06:30:43 EDT 2003 ←①
 -- HDD SMART:Val(Max)/Thrsh --<<Spare Sector>> fd(fd)/3f  <<Sk ErrRate>> fd(fc)/00
<<Spdl Mtr Retry>> fd(fc)/9d <<W ErrRate>> fd(fc)/00 Lecel=0 ←②
<<<<< Start PRV-LX10 >>>>>   Mon Oct 20 07:09:38 EDT 2003 ←①
 -- HDD SMART:Val(Max)/Thrsh --<<Spare Sector>> fd(fd)/3f  <<Sk ErrRate>> fd(fc)/00
<<Spdl Mtr Retry>> fd(fc)/9d <<W ErrRate>> fd(fc)/00 Lecel=0 ←②
```

① Time when the PRV-LX10 starts up

② Data from "--HDD SMART:Val(max)/Thrsh--" to "Level=0" indicate SMART data regarding the built-in HDD confirmed when the PRV-LX10 starts up. The results of confirmation on SMART data are recorded in the log file when System is selected by opening Function Menu then System, as well as at startup. The levels of self-diagnosis results are as shown below.
It should be noted that the descriptions of the levels are different from those used on the Function Menu.
For details, see "Levels of the self-diagnosis results of the HDD and measures to be taken for them."
0: Normal operation
1: Level calling for the user's attention (indicated as 0+ on the Function Menu)
2: Level calling for the user's attention (indicated as 1 on the Function Menu)
3: Warning symptoms of an HDD failure (indicated as 2 on the Function Menu)
4: On the brink of an HDD failure (indicated as 3 on the Function Menu)
5: HDD failure (indicated as 4 on the Function Menu)

③ A total number of errors generated on the PCI bus after the PRV-LX10 starts up is recorded (Each time the power is turned on, the number of errors is counted from 0). If errors are frequently generated, it may because of a defective Motherboard or PCI board, or poor connection caused by inappropriate installation of the PCI board. Error data are recorded in the log file each time an error is generated. Error data are also indicated on the Service Info page, which can be accessed by selecting Function Menu, System, Information, then Service Info, only when an error is generated (the first figure indicates the level of the self-diagnosis results of the HDD, and the second indicates the total number of PCI bus errors).

④ Each time the unit starts up, and each time System is selected (select Function Menu then System), the level of the self -diagnosis results of the HDD is confirmed and recorded in the log file. Data from "<<Check HDD SMART Data>>" to "Level=0" are the results of confirmed SMART data to be recorded when System is selected (select Function Menu then System).

■ Levels of the self-diagnosis results of the HDD and measures to be taken for them

In the service_info.log file, detailed data on Service Info, which can be accessed by selecting Function Menu, System, Information, then Service Info, are recorded, as shown below:

Measures to be taken for each level of the self-diagnosis results of the HDD are shown below.
The levels of the self-diagnosis results of the HDD can be confirmed from the log file (service_info.log), as well as on the Function Menu. However, it should be noted that the descriptions of the levels are different between those used in the log file and on the Function Menu (for example, Level 2 in the log file is equivalent to Level 1 on the Function Menu).

- **Level 0** (Level 0 on the Function Menu): Normal operation
  No problem

- **Level 1** (Level 0+ on the Function Menu): Level calling for the user's attention
  Although it has not constituted a problem yet, the user should be notified to make backups of data on the HDD, following the procedure in the instruction manual. Check if the HDD has been exposed to any inappropriate environment, such as extreme temperature, vibration, noise, or temporary blackout, on the user's side. Especially, check if the user turns off the power in a correct way. If user's handling of the HDD is inappropriate, he/she must be instructed on appropriate handling of the HDD.

- **Level 2** (Level 1 on the Function Menu): Level calling for the user's attention
  Although it has not constituted a problem yet, replace the HDD if symptoms as shown below appear. Even if such symptoms do not appear, the user should be strongly recommended to make backups of data on the HDD, following the procedure in the instruction manual. Check if the HDD has been exposed to any inappropriate environment, such as extreme temperature, vibration, noise, or temporary blackout, on the user's side. Especially, check if the user turns off the power in a correct way. If user's handling of the HDD is inappropriate, he/she must be instructed on appropriate handling of the HDD.

  Case 1:
  Although the power was turned off by pressing the POWER button on the front panel of the main unit, the following symptoms appear when the unit starts up. (The following symptoms are likely to appear if the power was forcibly turned off with the power switch on the rear panel. Be sure to check how the user turned the power off.)
  ① The unit occasionally does not start up normally.
  ② While the program is starting up, it often occurs that the messages [POWER-ON] and [ROOT-ERROR] are displayed on the FL display and that the time required for startup becomes longer. (If the message [ROOT-ERROR] is displayed occasionally, it is not a problem. But if it is often displayed, it is a problem.)
  ③ While the program is starting up, it often occurs that the messages [POWER-ON] and [FSCK-XXXX] are displayed on the FL display for more than 30 seconds and that the time required for startup becomes longer. (If the message [FSCK-XXXX] is displayed occasionally for more than 30 seconds, it is not a problem. But if it is often displayed, it is a problem.)

  Case 2:
  Although the Decoder board is normal, one of the following symptoms appears when data recorded on the HDD are played back:
  ① playback stops around many particular points (in many sessions), or
  ② the playback picture is disturbed around many particular points (in many sessions.)

  Case 3:
  When checking of the HDD is executed by selecting Function Menu, System, HDD Tools, then Check, the program freezes up (checking is not finished even after 30 minutes or more).

  Case 4:
  Other symptoms likely to be caused by a failure in the HDD

- **Level 3** (Level 2 on the Function Menu): Warning symptoms of an HDD failure
  As this level may have resulted from a temporary cause, it is defined as a level that requires careful use of the HDD as per the instruction manual. The cause may not be a problem if the user does not recognize any symptom. Thus, even if the result level is 3, it does not mean that replacement of the HDD is necessary. However, it is not recommended that the user continue using the unit as is. Therefore, if servicing is requested by the user, even if the request for servicing is for another reason, replacement of the HDD should be also performed. In such a case, check if the HDD has been exposed to any inappropriate environment, such as extreme temperature, vibration, noise, or temporary blackout, on the user's side. Especially, check if the user turns off the power in a correct way. If user's handling of the HDD is inappropriate, he/she must be instructed on appropriate handling of the HDD.

- **Level 4** (Level 3 on the Function Menu): On the brink of an HDD failure

- **Level 5** (Level 4 on the Function Menu): HDD failure
  Replace the HDD. If failures of these levels occurred several times within 2 years after installation, it is likely that the HDD has suffered from mishandling by the user. If it is the case, the user must be instructed on appropriate handling of the HDD.

7.1.6 ERROR LOG DISPLAY

How to display the Error log

- Start the PRV-LX10 and let it run idle (in the state in which the Function menu is not displayed and neither recording nor playback is performed).
- On the remote control unit for service, press the [ESC], [TEST], [REP.A], and [8] keys, in that order. The error log for Drive 1 is displayed.
- To display the error log for Drive 2, press the [ESC], [TEST], [REP.A], and [9] keys, in that order.

Outline of the Error log

Up to 8 error records (16-byte data per record) are held for each drive (see Table 1 "Error record"). If there are more than 8 errors, the oldest record is deleted each time a new one is logged.

Description of the Error log

The order of error generation and error codes are described here.

1. Order of error generation

One byte of data at the beginning of each record (Byte 0) is called the Identity code. The Identity code of the latest record is FFh, and for other records it is 00h. However, if an error is generated for the first time after the power was turned on, FFh is rewritten as BBh. Therefore, from the record having "FFh" Identity code back to the record immediately before that having "BBh" as its Identity code are the error records generated from the latest power-on until the present (or the latest power-off).

Note: At the initial setting, all codes of any record are set FFh. If all codes in a record are FFh, it means that the record has no valid data.

2. Error codes

At Byte 7 of each record, an error code is stored. For details on error codes, see Table 2. Ignore any record whose code for Byte 8 (execute task) is 88h, because it means that the record is for obtaining data on internal status.

Note: The data displayed on the error-log screen are directly dumped from the error-log data stored in memory for the drive, and no process (including data sorting) is added on the part of the PRV-LX10 application.

Table 1: Error record

0	1	2	3	4	5	6	7
Identify	aging No.	aging pointer	controller command	controller step	host command	endeco command	error code
8	9	10	11	12	13	14	15
excute task	error address (H)	error address (M)	error address (L)	error detail (H)	error detail (L)	aging cycle (H)	aging cycle (L)

Table 2: Description on error codes

Code	Content	Supplementary information
01h	DECODE_ERROR	Failure in reading PreGap (CD), improper results of RFEndSeek (DVD)
02h	RF_NOT_EXIST,	Read-request address not recorded
03h	RMD_NOT_DETECT,	RMD not detected
04h	LIN_NOT_DETECT,	Lead-in not detected
05h	LIN_NOT_COMPLETE,	Incomplete lead-in
06h	ILLEGALL_NUMBER_OF_BYTE,	Illegal CD mode detected (Illegal Mode for This Track Error)
07h	IF_ABORT_DET,	Processing aborted upon the request of I/F
08h	MECHA_TIMEOUT,	Timeout waiting for search
09h	BUFFERING_TIMEOUT,	Combo Chip decoding not started (the screen is frozen but remains active)
0Ah	RETRY_TIMEOVER,	Number of times of retrial over
0Bh	READ_TIMEOUT,	Timeout waiting for read process
0Ch	RECOVERED_DATA,	"Recovered error" detected
0Dh	VERIFY_ERROR,	An error was generated while the Verify command was being processed
10h	M63_INTERNAL_ERR	Failure in internal processing
11h	M63_FORMATTER_ERR,	Failure in detecting a sync
12h	M63_IDOVER_ERR,	Target-ID exceeded
13h	M63_HDCMP_ERR,	Header-compare error
14h	M63_UNCORRECTABLE_ERR,	Unrecoverable error
15h	M63_CRC_ERR,	CRC error
16h	M63_ETC_ERR,	Other errors of Combo Chip
17h	M63_BLK_ERR,	CIRC unrecoverable error
18h	M63_HDC2_ERR,	Header C2 error
19h	Internal Timeout	Timeout waiting for Combo Chip internal processing
1Ah	M63_TRX_ERR	Failure in transmitting data to the host computer
1Bh	Mecha Not Active	Mechanical-control computer not ready for search (tray opened, etc.)
1Ch	FIFO Error	Internal FIFO error
1Dh	Buffering Abort	Failure in obtaining DVD-data-type information
1Eh	Too Far From Target ID	Improper address after search (too far before the target address)
1Fh	M63 Replay Req.	Combo-Chip decoding not started (the unit arbitrarily returns to idling status)
20h	Buffer Full	
21h	Buffer Under Run	
22h	Panic in	
23h	Discontinuous time data	
24h	Wobble servo phase difference exceeded	
25h	ASYOVR allowable count number exceeded	
26h	ASYNC allowable interpolation number exceeded	
27h	Invalid Cue Sheet	
28h	Non Cue Sheet	
29h	Disc Full	
2Ah	Reserved Track Full	

Code	Content	Supplementary information
2Bh	Address Error	
2Ch	Abort because of a mechanical error	
2Dh	Abort by the host computer	
2Eh	Invalid Command	
2Fh	Target Address Over	
30h	OPC record error (before encoding)	
31h	OPC record error (after encoding)	
32h	OPC playback error (during playback)	
33h	OPC playback error (data error)	
34h	OPC upper limit of power exceeded	
35h	OPC lower limit of power exceeded	
36h	Encode Start Error	
37h	Unexpected Status Error	
38h	CD Over Power Error	
39h	Shock Detect Error	
40h	Buffer full	
41h	Buffer underrun	
42h	Lower OPC power	
43h	Higher OPC power	
44h	OPC failure	
45h	Encoding failure	
46h	DMA failure	
47h	DECSS measures	
48h	Inconsistency in rotation speed of the spindle	
49h	Write power 0	
4Ah	OPC record failure (retry is possible)	
60h	Command Sequence Error */	
61h	Logical Unit Communication Failure */	
62h	Illegal Logical Block Address */	
63h	Internal Controller Error */	
64h	Prevent Medium Removal */	
65h	System Resource Failure */	
66h	Authentication Failure */	
67h	Key Not Present */	
68h	Key Not Established */	
69h	Authentication Not End */	
6Ah	Incompatible Format */	
6Bh	Region Mismatch */	
6Ch	Region Reset Count Error */	
6Dh	De-Compression CRC Error */	

Code	Content	Supplementary information
6Eh	OPC area full */	
6Fh	OPC area almost full */	
70h	Parameter Value Invalied */	
71h	Media detect error */	
72h	RMA almost full */	
73h	Media not Present */	
74h	Long Write In Progress */	
75h	Session is not full */	
76h	Subcode-Q is not valid */	
77h	track start arress is not valid */	
78h	track end arress is not valid */	
79h	track end arress error at incomplete track	
7Ah	Pregap read error	
7Bh	PMA is not complete	
7Ch	Vender reset Sequence Error	
7Fh	Data compare error (for aging)	
80h	Unsupported Command	
81h	Illegal Mode	
82h	Illegal Request	
83h	Aborted	
84h	Timeout	
88h	Loading Mecha NG	
89h	TOC Read Error	
8Ah	PrePit Read Error	
8Bh	BCA READ ERROR	
90h	Search Address Error	
91h	Illegal Track Request	
A0h	No Disc	
A1h	Disc NG	
A8h	Servo NG Stop	
A9h	Line Adjustment NG	
Aah	Auto Adjustment Data NG	
B0h	Focus Close Fail	
B1h	Focus Servo Failure	
B5h	Focus Jump Fail	
B8h	RF not exist	
C0h	Track Close Fail	
C1h	Track Servo NG	
C2h	Track Jump NG	
D0h	Spindle Start Fail	
D1h	Spindle Stop Fail	
D2h	Spindle High Speed Fail	
D3h	Spindle Low Speed Fail	
D4h	Spindle DVD Wob In Fail	
D5h	OPC end search Error	
D6h	RF end search Error	
D7h	Spindle DPLL ON Error	
D8h	Spindle RF Error	
D9h	Tilt Adjustment Error	

7.1.7 DEBUGGING DISPLAY MODE

■ How to operate in Debugging Display mode

1) To enter ([ESC] - [DISPLAY])
To enter Debugging Display mode, press the [ESC] key on the remote control unit for service then the [DISPLAY] key.

2) To advance a page ([DISPLAY])
After entering Debugging Display mode, press the [DISPLAY] key. Each time the key is pressed, the page advances by one. You cannot turn the page backward.

3) To advance a subpage ([SIDE-A] or [SIDE-B])
Some pages have subpages. You can advance or go back one subpage using the [SIDE-A] or [SIDE-B] key.

4) To exit ([ESC])
To exit Debugging Display mode, press the [ESC] key. If the [ESC] key then the [DISPLAY] key are pressed to enter Debugging Display mode again, the last page previously displayed is displayed.

■ Description of pages

1) Version information (Page 1)
The version for each program is displayed.

Program : 3.01	← Version of the program (*1)
OS : 1.04	← Version of the OS

DVDRec : 1.90.2.10	← Data to be used by engineers
:	
:	
FLCOM : 137	← Version of the front-panel microcomputer (*2)

DVD-RW PRV-LX1 1.31U 03/05/19 PIONEER	← Version of Drive 1
----------	← Version of Drive 2
Shimuke=2 PON=********* (2/2/2)	
FAN OK(1)/PSON OK(1) GUID=*******	← Data on destination and region (*3)
3.12P2	← Data on the fans and GUID (*4)
	← Version of BIOS

* : Arbitrary

(*1) If "XX.XX-XX" is displayed as the program version, only the OS has been installed, but the application program has not been installed. Install the correct program.

(*2) IC501 PE5392A9 FLCOM:137
PE5392B8 FLCOM:138

(*3) Breakdown of destination:
0: J (Japan), 1: KU (North America), 2: WY (Europe)
The data on region in the above example are "(1/1/-1)," expressing "(region for the Decoder board/region for Drive 1/region for Drive 2)" ("-1" means that Drive 2 does not exist).

(*4) "OK" is displayed when two fans in the front section and a fan at the rear section (a fan not for the power-supply block) are operating properly. "GUID=xxxxx" is for DV.

2) Disc playback data (Page 2)

The internal data regarding disc playback are displayed. On this page, the error rate during disc playback can be confirmed. To start measuring the error rate, enter Debugging Display mode then press the PLAY key on the remote control unit for servicing. The results are displayed in the order of measured address and measured value.

The indication "XXXXXXXX_0.000000e+00" as shown in the figure below indicates the status before a measuring task starts. To cancel measuring in progress, press the CLEAR key on the remote control unit for servicing.

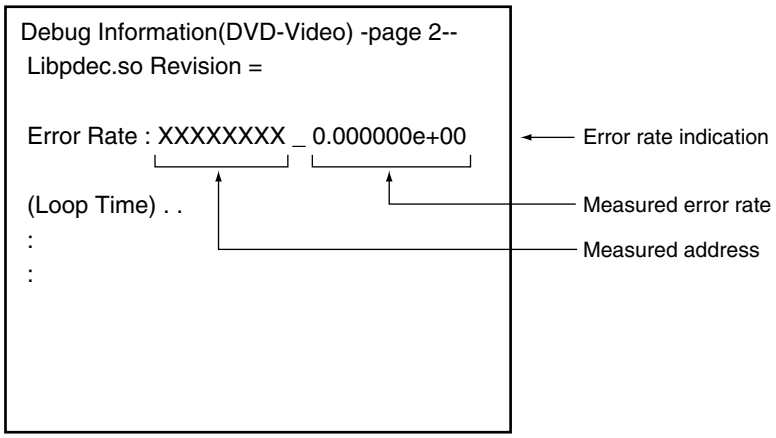

3) Data on the Decoder board (Page 3)

The data on the Decoder board are displayed. One among several subpages is for the error log for the Decoder board. You can go forward or back one subpage using the [SIDE-A] or [SIDE-B] key. To see the error log for initialization and self-diagnosis, after entering Page 3, press the [SIDE-A] key once. The following screen is displayed.

Note: If the Decoder board is defective, in many cases the TV output becomes unavailable. Therefore, the error records explained below may not be confirmed.

The error records are displayed as shown below. If no error was generated in the past, "No device error" is displayed.

```
Device Error History

10-030305210700 40-030306093005
50-030401112233 04-030405131500
```

In the above example, 4 error records are recorded. The first two digits in each record stand for the error type, and the following 12 digits express the time of occurrence:

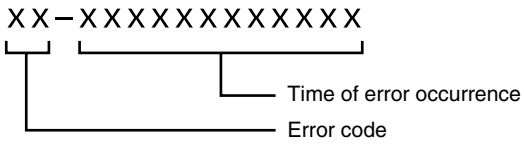

The time of error occurrence is expressed as "YYMMDDHHMMSS." So, "030110112345" means 11 o'clock 23 min 45 sec, January 10, 2003.

The breakdown of 2-digit error codes is as follows:

1 : Xilinx Configuration Error
Configuration of Xilinx (FPGA for PCI interface) failed.

4 : SH SDRAM Access Error
Reading from or writing in the SDRAM connected to the SH bus failed.

10 : Video Encoder Initialize Error
Communication with the Video Encoder (ADV7172) failed.

20 : AV Decoder Initialization Error
The AV Decoder (M65776AFP) failed to start up, or access to the AV Decoder failed.

40 : AV Decoder SDRAM Access Error
Reading from or writing in the SDRAM connected to the AV Decoder bus failed.

Some of the above errors may occur simultaneously. For example, "50" means the errors of error codes 10 (Video Encoder Initialize Error) and 40 (AV Decoder SDRAM Access Error) were generated at the same time.

4) Data on the Encoder board (Page 4)

The data on the Encoder board are displayed. If the [SIDE-A] key is pressed on this page, the error log for the Encoder board can be checked.

An error record is expressed as shown below:

(Example) 2003/07/01 10:30:20 == 09 03 ==

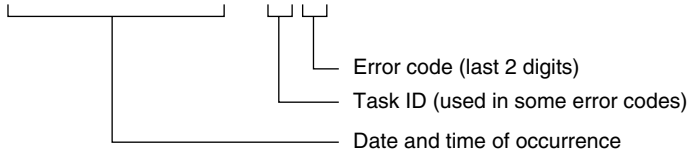

The meaning of the error codes and correction measures are described below:

Code	Content of Error	Correction Measures
01	Data Read Timeout Error	Turn the power off then on again.
02	Copy Protection Error	As the selected input signal is copy-protected, recording could not be performed. When this error is generated even if the video signal from the disc created by the PRV-LX1 is to be recorded, replace the AVIB board.
03	(task ID : 09(h))Illegal frame number Error	Turn the power off then on again.
	(task ID : 32(h))No digital signal Error	Because no digital signal is input to the selected digital input connectors, recording could not be performed. When this error is generated even if the digital signal is confirmed to be input to the DV connectors, etc., replace the AVIB board.
04	PCI Destination Address Timeout Error	Turn the power off then on again.
05	PCI Map Timeout Error	Turn the power off then on again.
C9	Hard Error	Check wiring or connections. If the problem persists after corrective measures are taken, replace the AVIB board.
CA	Reset Error	Check wiring or connections. If the problem persists after corrective measures are taken, replace the AVIB board.
	(task ID : 0A(hex))Stream Buffer Full Error	Turn the power off then on again.
CB	Initialize Error	Check wiring or connections. If the problem persists after corrective measures are taken, replace the AVIB board.
CC	Standby Error	Turn the power off then on again.
CD	Command Error	Turn the power off then on again.
CE	Stream Timeout Error	Turn the power off then on again.
CF	Command Timeout Error	Turn the power off then on again.
D0	Buffer Full Error	Turn the power off then on again.
D2	Hard Error(Audio Enc.)	Check wiring or connections. If the problem persists after corrective measures are taken, replace the AVIB board.
D3	Reset Error(Audio Enc.)	Check wiring or connections. If the problem persists after corrective measures are taken, replace the AVIB board.
D4	Initialize Error(Audio Enc.)	Check wiring or connections. If the problem persists after corrective measures are taken, replace the AVIB board.
D5	Standby Error (Audio Enc.)	Turn the power off then on again.
D6	Command Error (Audio Enc.)	Turn the power off then on again.
D7	Command Timeout Error (Audio Enc.)	Turn the power off then on again.
DC	Hard Error (Video Enc.)	Check wiring or connections. If the problem persists after corrective measures are taken, replace the AVIB board.
DD	Reset Error (Video Enc.)	Check wiring or connections. If the problem persists after corrective measures are taken, replace the AVIB board.
DE	Initialize Error (Video Enc.)	Check wiring or connections. If the problem persists after corrective measures are taken, replace the AVIB board.
DF	Standby Error (Video Enc.)	Turn the power off then on again.
E0	Command Error (Video Enc.)	Turn the power off then on again.
E1	DV Decode Error	Turn the power off then on again.
E2	DV Encode Error	Turn the power off then on again.
E3	FS Change Error (before)	Turn the power off then on again.
E4	FS Change Error (after)	Turn the power off then on again.
E5	Command Timeout Error (Video Enc.)	Turn the power off then on again.
E6	Command Execute Error (Video Enc.)	Turn the power off then on again.

5) Recording data (Page 5)

The internal data on recording are displayed.

6) Application data (Page 6)

The internal data on the application are displayed.

■ Note on the drive error log: The drive error log can be displayed in Test mode.

7.1.8 LIST OF BIOS SETTING VALUE

Customized Default Values	
	Ver3.12P2
Standard CMOS Features	
Date (mm:dd:yy)	G.M.T (Greenwich Mean Time)
Time (hh:mm:ss)	G.M.T (Greenwich Mean Time)
IDE Primary Master	Depends on assembled IDE Device
IDE Primary Slave	Depends on assembled IDE Device
IDE Secondary Master	Depends on assembled IDE Device
IDE Secondary Slave	Depends on assembled IDE Device
Drive A	None
Drive B	None
Video	EGA/VGA
Halt On	All, But Disk/Key
Advanced BIOS Features	
Virus Warning	Disabled
CPU L1 & L2 Cache	Enabled
Quick Power On Self Test	Enabled
First Boot Device	HDD-0
Second Boot Device	CD-ROM
Third Boot Device	Disabled
Boot Other Device	Disabled
Swap Floppy Drive	Disabled
Boot up Floppy Seek	Disabled
Boot up Numlock Status	On
Gate A20 Option	Fast
Typematic Rate Setting	Disabled
Typematic Rate (Chars/Sec)	N/A
Typematic Delay (Msec)	N/A
Security Option	Setup
APIC Mode	Enabled
MPS Version Control For OS	1.4
OS Select For DRAM > 64MB	Non-OS2
Report No FDD For WIN 95	Yes
Small Logo(EPA) Show	Disabled
Advanced Chipset Features	
DRAM Timing Selectable	By SPD
CAS Latency Time	N/A
Active to Precharge Delay	N/A
DRAM RAS# to CAS# Delay	N/A
DRAM RAS# Precharge	N/A
Turbo Mode	Disabled
Memory Frequency For	Auto
System BIOS Cacheable	Enabled
Video BIOS Cacheable	Disabled
Memory Hole at 15M-16M	Disabled
Delayed Transaction	Enabled
Delay Prior to Thermal	16 Min
AGP Aperture Size (MB)	64
On-Chip VGA	Enabled
On-Chip Frame Buffer Size	8MB

Customized Default Values	
	Ver3.12P2
Integrated Peripherals	
IDE DMA transfer access	Enabled
On-Chip Primary PCI IDE	Enabled
IDE Primary Master PIO	Auto
IDE Primary Slave PIO	Auto
IDE Primary Master UDMA	Auto
IDE Primary Slave UDMA	Auto
On-Chip Secondary PCI IDE	Enabled
IDE Secondary Master PIO	Auto
IDE Secondary Slave PIO	Auto
IDE Secondary Master UDMA	Auto
IDE Secondary Slave UDMA	Auto
USB Controller	Enabled
USB 2.0 Controller	Enabled
USB Keyboard Support	Enabled
USB Mouse Support	Enabled
AC97 Audio	Disabled
Init Display First	Onboard/AGP
Onboard LAN	Enabled
Onboard LAN boot ROM	Disabled
IDE HDD Block Mode	Enabled
POWER ON Function	BUTTON ONLY
KB Power ON Password	N/A
Hot Key Power ON	N/A
Onboard FDC controller	Enabled
Onboard Serial Port 1	3F8/IRQ4
Onboard Serial Port 2	2F8/IRQ3
Onboard Parallel Port	Disabled
Parallel Port Mode	N/A
ECP Mode Use DMA	N/A
Power Management Setup	
ACPI Suspend Type	S1(POS)
Run VGABIOS if S3 Resume	N/A
Power Management	User Define
Video Off Method	DPMS
Video Off In Suspend	Yes
Suspend Type	Stop Grant
MODEM Use IRQ	3
Suspend Mode	Disabled
HDD Power Down	Disabled
Soft-Off by PWR-BTTN	Instant-Off
After Power Loss	Stay Off
Wake-Up by PCI card	Enabled
Power On By Ring(S5/DOS)	Disabled
USB KB Wake-Up From S3	N/A

Customized Default Values	
	Ver3.12P2
Power Management Setup	
Resume by Alarm	Disabled
Date(of Month) Alarm	N/A
Time(hh:mm:ss) Alarm	N/A
Reload Global Timer Events	
Primary IDE 0	Disabled
Primary IDE 1	Disabled
Secondary IDE 0	Disabled
Secondary IDE 1	Disabled
FDD,COM,LPT Port	Disabled
PCI PIRQ[A-D]#	Disabled
PnP/PCI Configurations	
Reset Configuration Data	Disabled
Resource Controlled by	Auto(ESCD)
IRQ Resources	N/A
Frequency Control	
Auto Detect PCI Clk	Enabled
Spread Spectrum	Enabled
Set Supervisor Password	Disabled
Set User Password	Disabled

7.1.9 REWRITING OF THE GUIDS

Notes:
- Because the GUIDs are written on the PCIB Assy before shipping, rewriting of the GUIDs is not necessary when replacing the PCIB Assy.
- When IC2406 (PD6453D8) on the PCIB Assy is replaced, rewriting of the GUIDs is required.

When rewriting the GUIDs, connect the COM port of your PC and the connector for servicing mounted on the PCIB Assy of the unit.
For transmission of commands, use general-purpose RS-232C communication software.
Communication settings are as follows:

Bit rate	: 57600 bps
Data bits	: 8
Parity	: None
Stop bit	: 1
Flow control	: None

Procedures:
1. Take note of the numbers written on the GUID label stuck on the PCIB Assy.
2. Install the PCIB Assy in the unit. Connect the COM port of your PC and CN2405 on the PCIB Assy, using the DVD interface jig (GGF1348).

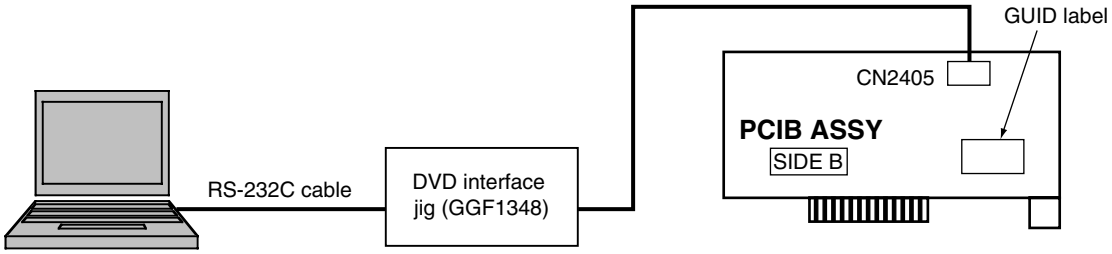

3. Turn the unit on. After the unit starts up, enter "/15*****/SW" from the PC then press [ENTER] key to send the command ("*****" stands for a specific GUID).
   Note: The value written on the GUID label is in decimal notation and must be converted to hexadecimal for writing a command. For details, see "Format of the GUID label."

4. Enter "SR" from the PC then press [ENTER] key to send the command.
   As "GUID: 15*****" is displayed, check that this value is the same as that entered in Step 3.

Format of the GUID label (for reference)

The IEEE1394 Interface is mounted in the unit, and the EUI-64 codes are written in the flash ROM (IC2406) on the PCIB Assy. On the GUID label, this content is described.

1. Printing format
   Label: The part No. of the label is VRW1877.
   Print color: Black
   Printed content: Barcode: CODE128
   Numerics: GUID serial No. (last 7 digits)

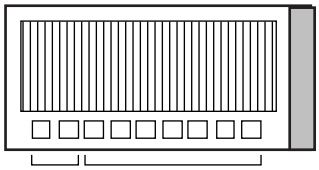

Two digits at the beginning: 00 — Last 7 digits: GUID serial No. (0000001-1048575)

2. Relationship between the ID of the Assy and the serial number
   The values written on the Assy are the ID of the product (0x015) and the GUID serial No. specific to each product. The relationship between these numbers and the serial numbers printed on the label is as shown below:

Relationship between the ID of the Assy and the serial number

Values (in hex) to be written on the Assy	Serial numbers (in decimal) printed on the label
01500001	000000001
01500002	000000002
:	:
:	:
015f f f f f	001048575

7.1.10 CAUTIONS ON HANDLING THE HDD

(1) Cautions on Handling the HDD

- The HDD is very sensitive to shocks and vibrations. Care must be taken especially during operation (when the power is on).
- The HDD is very sensitive to electrostatic charges.
- Rapid change in temperature or humidity may cause deterioration of the HDD.

Note: After receiving damage caused by any above-mentioned factors, the HDD may operate normally for dozens or some hundreds of hours but then suddenly crash. If you are certain you have damaged a new repair part (HDD) while making repairs, do not use the part.

The HDD is about 10 times as sensitive to shock during operation than during nonoperation.

Reference: Main specifications on damage to the HDD

	During operation	During nonoperation
Shock G (acceleration)	<approx. 20 G	<approx. 200 G
Temperature change	< 20°C/hour	
Moisture change	< 20%/hour	

Reference: Estimate value of falling distance vs. shock (G) when the HDD is dropped without protection

Falling distance \ Landing surface	Granite surface	Concrete floor	Synthetic-resin-coated table	Antistatic sponge
0.5 inch / 1.27 cm	387	217	200	26
1.0 inch / 2.54 cm	595	457	310	37
2.0 inch / 5.08 cm	1133	600	680	70
4.0 inch / 10.16 cm	1795	1040	1050	267

(2) Cautions on handling the product on which the HDD is mounted or the HDD as a repair part, and examples of dangerous handling

[Cautions on handling the product on which the HDD is mounted]

- While the unit is turned on, the HDD is always in operation. Be sure NOT to impart shock to the unit.

● **Examples of dangerous handling: while the power is on**

- Bumping on the bonnet
- Dropping an object, such as a small screwdriver or remote control unit, onto the bonnet, or bumping an object against the cabinet
- Moving the unit by dragging
- Stacking another product on the unit

Note: Be sure NOT to impart shock, such as bumping or hitting a screwdriver against the HDD, during diagnosis with the bonnet open.

● **Examples of dangerous handling: while the power is off**

- Imparting strong shock, although the HDD is more resistant to shock when the power is off
- Dropping the unit from a height of several centimeters, or after lifting one side of the unit up, then letting the unit drop.

- Do NOT move the unit immediately after the power is turned off. Wait at least 30 seconds after the indication on the FL display changed from POWER OFF to the clock indication before moving the unit.
  If the AC power cord is accidentally disconnected before turning the unit off, wait at least for one minute before moving it. In this case, damage to the HDD caused by sudden shutoff may be small, because the emergency relief mechanism is activated. However, if sudden shutoff occurrs during recording or playback, recorded data may be damaged. Be sure to check operations.

[Cautions on handling the HDD as a repair part]

1. Handle the HDD in a safe environment:
   - Handle the HDD over an antistatic pad that can also absorb shock.
   - Wear wrist bands to prevent electrostatic charges generated in your body from affecting the HDD.

2. The following must be observed when handling the HDD:
   - Handle one HDD at a time. Do NOT hold several HDDs at the same time.
   - Grip the HDD on both sides so that you do not touch its terminals or circuit boards.
   - Do NOT stack one HDD onto another HDD (even if the HDDs are protected in antistatic bags).
   - Do NOT bump the HDDs against one another.
   - Do NOT bump any tool, such as a screwdriver, or other hard object against the HDD.
   - When a repair part (HDD) is transported and there is a large temperature difference between outdoors and indoors, to the indoor, leave it in its package for about a half day to gradually cool or warm the HDD to room temperature before unpacking it.

[Notes on packing for shipment]

- When returning a defective HDD for analysis, handle with care as if it were a good product. Otherwise, the results of analysis may not be correct.
- When packing, use the antistatic bag and packing materials in which the repair part for service was delivered. Attach a copy of the slip for service or a memo stating symptoms in as much detail as possible.

■ Outline and part No. of the HDDs

Model Name	Capacity	Maxtor	
		Pioneer's Part No. (for service)	Manufacturer's Part No.
PRV-LX10	120 Gbyte	VXF1016	4R120L*

* Pioneer's part No. is not stamped.

- When replacing the HDD, carefully check the capacity and manufacturer's part No. on the part label to avoid replacing with a similar but inappropriate product. You can also check the model No. of the mounted HDD on the Service mode screen.
- Do NOT use repair parts, such as commercially available HDDs, other than those designated above, as their functions, performance or reliability cannot be guaranteed.

• **Maxtor**

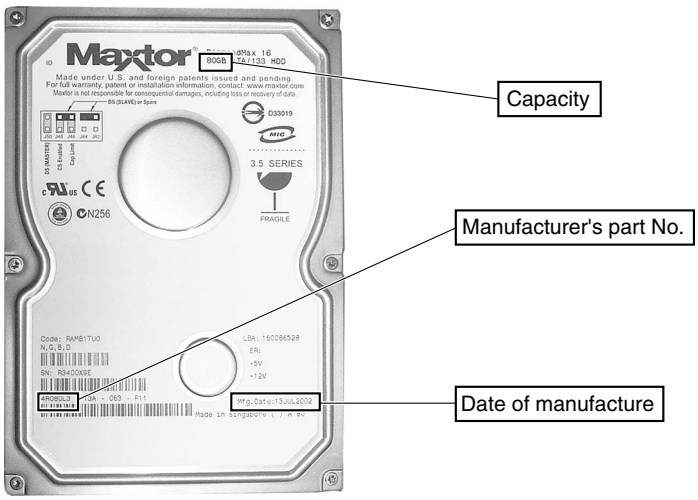

Fig. 1 Location of the data on capacity and part No. of the HDD

■ JP pin setting for the HDD

The factory jumper-pin setting for the HDD is CS (Cable Select), as shown in the figure below.
When installing the HDD to the unit, set the jumper pin to the MASTER position.

• **Maxtor**

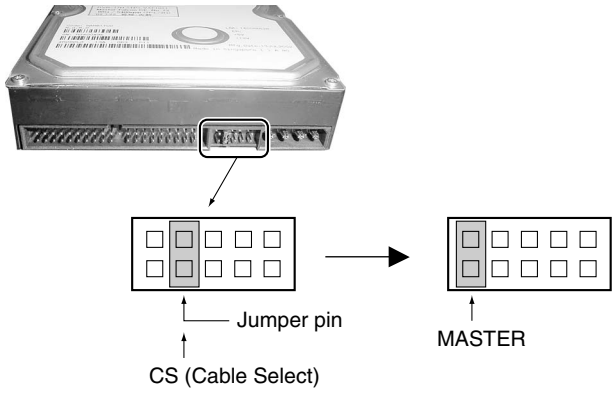

Fig. 2 Setting of the jumper pin

7.1.11 HDD REPLACEMENT PROCEDURES

■ In a case where the HDD being installed operates normally, but is to be replaced for maintenance, etc. → Perform copying of HDD data.

1. Obtain an HDD copying disc for the PRV-LX10 and a new HDD *1. (Do NOT connect the HDD in this step.)

2. In Standby mode, while holding the [ENTER] button pressed, press the [STANDBY/ON] button on the front panel to start up the unit.

3. When the tray for Drive 1 opens, load the HDD copying disc for the PRV-LX10 into it. Then hold the [ENTER] button on the front panel pressed until the beep sounds.

4. After the unit is automatically shut off, set the POWER switch on the rear panel to OFF. Then make preparations for the HDD, as follows:
   IMPORTANT: During the following procedures, be sure NOT to impart shock to the HDD.
   (1) Remove the built-in HDD from the unit. Change the position of the jumper pin from MASTER to SLAVE. Connect the IDE cable for Drive 2 ("Secondary" cable) and the power cable.
   IMPORTANT: Be careful that the PCB block of the HDD does not come into contact with any other electric circuit block (to avoid short-circuiting of the HDD).
   (2) Set the jumper pin of the new HDD to the MASTER position and install the new HDD in the place where the built-in HDD was. Connect the IDE cable ("Primary" cable) and the power cable.

5. Set the POWER switch on the rear panel to ON then press the [STANDBY/ON] button on the front panel to turn the unit on. The HDD copying disc (GGV1176) for the PRV-LX10 is automatically started, and the following message is displayed on the monitor screen:

   Welcome to Pioneer DVD Recorder HDD Backup Program
   Data = 2003.09.02....

   Press appropriate front panel button for 2 seconds
   followed by [ENTER] button for 2 seconds.
   1)[UP] Full Copy (Secondary/Slave –> Primary/Master)
   2)[DOWN] Quit

6. Hold the [UP] button on the front panel pressed at least 2 seconds then hold the [ENTER] button pressed at least 2 seconds. Copying of data from the old HDD to the new HDD starts. (The time required for copying varies depending on the amount of user data, but the approximate maximum time is 2 hours.)

7. After copying is completed, the disc is automatically ejected, then the unit restarts. Check operations after startup is completed. If there is no problem, turn off the unit.

8. Set the POWER switch on the rear panel to OFF. Disconnect the old HDD connected to the cables from Drive 2.

9. Check the cable connections.
   Note: If Drive 2 is available, make the connections as they were originally made.

*1 If an HDD that has already been used with another unit is to be used as a new HDD (copy-destination HDD), copying cannot be done if there are project data on that HDD. In this case, first delete all project data from the HDD, using the Function menus. When using a reused HDD without project data, copying of only the user's data becomes possible. In this case, the following optional menu is added in the message displayed in Step 5:

3)[LEFT] DATA Copy (Secondary/Slave –> Primary/Master)

■ In a case where the HDD being installed does not physically operate → After replacement of the HDD, reinstall the software program.

1. After checking that the POWER switch on the rear panel is set to OFF, replace the built-in HDD with a new one.
   IMPORTANT: During the following procedures, be sure NOT to impart shock to the HDD.

2. Using the forced-eject pin (DEX1008), open the tray for Drive 1 then load the OS installation disc for the PRV-LX10 into the tray. **Note:** Push the tray in a little then turn on the power.

3. Following the procedures for "OS installation," install the OS, using the OS installation disc (GGV1177) for the PRV-LX10. See "7.1.14 How to Install the OS or Program."

4. Following the procedures for "Program installation," install the program, using the Program installation disc (GGV1234, Ver. 3.01) for the PRV-LX10. See "7.1.14 How to Install the OS or Program."

Note: Before discarding an old HDD, physically destroy it so that the data on it cannot be extracted.

7.1.12 HOW TO CHECK THE HDD

• How to check the HDD that is mounted on the product is described below:

① Select Function Menu, Setup, System, HDD Tools, then Check, and execute. "HDD File System Check" is executed, and recoverable errors are corrected. The results can be checked on the monitor screen.

② The HDD check can also be performed from the following menu displayed during OS installation:
(1) [UP] : Full Install (Delete all data)
(2) [DOWN] : Install (Keep user's data)
(3) [LEFT] : HDD File System Check
(4) [RIGHT] : HDD Test (Bad Block Check)
(5) [SCAN R] : Quit

Select (3) or (4), and execute. The result can be checked on the monitor screen.
For details on how to enter the menu, see "OS installation" in "7.1.14 How to Install the OS or Program."

Notes:
- An HDD Test (4 above) may take 10 hours or more, depending on the capacity of the HDD.
- If the menu does not appear in the process of the normal OS installation procedures, change the setting of BIOS "First Boot Device" to CD-ROM then restart the unit from the OS installation disc.
- In the above case, after the HDD Check is finished, be sure to return the setting of BIOS "First Boot Device" to HDD.

7.1.13 CLEANING

Before shipping out the product, be sure to clean the following positions by using the prescribed cleaning tools:

• Pickup

Position to be cleaned	Cleaning tools
Pickup lenses	Cleaning liquid : GEM1004 Cleaning paper : GED-008

• Fan

Position to be cleaned	Cleaning tools
Fans	Cleaning paper : GED-008

7.1.14 HOW TO INSTALL THE OS OR PROGRAM

■ OS installation

① While holding the [ENTER] button on the front panel pressed, press the [STANDBY/ON] button to start the unit.

② "PGM-INSTALL" is displayed on the FL display, and the tray for the DVD Drive opens.

Display on the monitor screen:

```
----------------------------------------
- PRV-LX10 Program Installer -
----------------------------------------
PLEASE INSERT INSTALLATION CD IN DRIVE ONE,
THEN PRESS [ENTER] BUTTON ON FRONT PANEL
FOR 2 SECONDS TO BEGIN UPDATE.
>>
```

③ Load the OS installation disc into the tray then press the [ENTER] button. The tray will close, and changing of the BIOS settings starts.

Display on the FL display:
DOWNLOAD FULL

Display on the monitor screen:

```
========================
= PRV-LX10 Program Installer =
========================

The PRV-LX10 will automatically start power off
after 5 seconds later.
Please press the power button after power off.

PLEASE WAIT A MINUTE.
Completed changing the BIOS settings.
```

④ When the unit is automatically turned off, turn it back on.

⑤ If the following menu* appears on the screen, select the operation you wish. Use the corresponding buttons on the front panel for selection. (For example, press the [UP] button to select full installation.)

(1) [UP] : Full Install (Delete all data)
(2) [DOWN] : Install (Keep user's data)
(3) [LEFT] : HDD File System Check
(4) [RIGHT] : HDD Test(Bad Block Check)
(5) [SCAN R] : Quit

(1) [UP]: Full Install (Delete all data)
- The whole HDD is formatted, then the OS is installed.
- All data, including the user data, are deleted. Installation is completed in about 10 minutes, then rebooting starts.
- During installation, the progress is displayed on the screen. If the screen does not change after about 15 minutes, or if the installation process has not been completed after about 30 minutes, turn off the power and restart the OS installation process. If installation cannot be completed on the second try, replace the HDD.

IMPORTANT!: After OS installation, be sure to install the program.

(2) [DOWN]: Install (Keep user's data)
- Only the OS is installed, leaving the user's data intact. This does not mean, however, that the integrity of the user's data is guaranteed.
- Installation is completed in about 8 minutes, then rebooting starts.
- During installation, the progress is displayed on the screen. If the screen does not change after about 15 minutes, or if the installation process has not been completed after about 30 minutes, turn off the power and restart the OS installation process. If installation cannot be completed on the second try, replace the HDD.

IMPORTANT!: After OS installation, be sure to install the program.

(3) [LEFT]: HDD File System Check
- A logical check of all files on the HDD is performed, then the results are displayed.
- To return to the menu, press the [ENTER] button on the front panel.

(4) [RIGHT]: HDD Test (Bad Block Check)
- A physical check of the HDD is performed, then the results are displayed. It must be noted that this test takes 10 hours or more.
- To return to the menu, press the [ENTER] button on the front panel.

(5) [SCAN R]: Quit
- To terminate the installation program and start rebooting

***With some installation discs for production lines, full installation starts automatically, without displaying the menu.**

⑥ Execute the selected item.
- After execution, rebooting starts automatically.

⑦ Turn off the power.

⑧ Start up the unit by pressing the [STANDBY/ON] button on the front panel, then make sure that the version of the OS is updated, using the Debug screen (ESC + DISP).

⑨ Proceed to program installation.

■ Program installation

① Hold the [ENTER] button on the front panel pressed and press the [STANDBY/ON] button to start up the unit.

② "PGM-INSTALL" is displayed on the FL display, and the tray for the DVD drive opens.

Display on the monitor screen:

```
----------------------------------------
- PRV-LX10 Program Installer -
----------------------------------------
PLEASE INSERT INSTALLATION CD IN DRIVE ONE,
THEN PRESS [ENTER] BUTTON ON FRONT PANEL
FOR 2 SECONDS TO BEGIN UPDATE.
>>
```

③ Load the program installation disc (GGV1234, Ver. 3.01) into the tray and press the [ENTER] button on the front panel. The tray will close, and upgrading of the version starts.

Display on the FL display:
DOWNLOAD FULL

Display on the monitor screen:

```
==============================
= PRV-LX10 Program Installer =
==============================

Setup Directories ...
Start Program Download ...
= Setup Drives. =       --> The message changes according to the progress.
====                    --> Progress bar
```

④ When installation is finished, the PRV-LX10's startup display appears on the monitor screen, the tray for DVD Drive opens, and "DOWNLOAD COMPLETED" is displayed on the FL display. Then the unit is automatically turned off.

⑤ Start up the unit by pressing the [STANDBY/ON] button on the front panel, then make sure that the version of the program is updated, using the Debug screen (ESC + DISP).

Note: If a program whose version is older than the currently installed one is to be installed, the following message is displayed:

On the monitor screen:

```
Current Version : 1.07
Installation CD Version : 1.05
Newer version programs have already been installed.
Press appropriate front panel button for 2 seconds
followed by [ENTER] button for 2 seconds.
(1) [ UP ] Force to install
(2) [ DOWN ] Quit.
>>
```

- To continue the installation process, press the [UP] button then the [ENTER] button on the front panel.

Operation	Sequence	Symptom	Check Item	Measures to be taken
Startup	From power on, supply of STB + 5 V power, to startup of the FL microcomputer STB_LED: Orange	The unit does not enter Standby mode even if the POWER switch is set to ON.	Check the following connections: The LED (D10) for STB +5 V power supply on the PWRB remains unlit: Disconnect the cable that connects the PWRB (CN3) and FLKB (CN501) then turn on the power. → D10 lights up. Disconnect the cable that connects the PWRB (CN3) and FLKB (CN501) then turn on the power. → D10 remains unlit. The LED (D10) for STB +5 V power supply on the PWRB is lit:	Check the connections for the ATX power supply, PWRB, and FLKB: Reconnect the 20-pin cable of the ATX power supply (DXF1005), or replace the ATX power supply. If it is suspected that the FLKB (DWZ1164) is defective, replace it. If it is suspected that the PWRB (DWZ1129) is defective, replace it. Replace ICP (IC8) on the PWRB (DWZ1129). Reconnect or replace the 20-pin cable (DKP3637) between the PWRB (CN3) and FLKB (CN501). If it is suspected that the FLKB (DWZ1164) is defective, replace it.
	STB_SW ON	Even if the STB switch is pressed, its indicator remains lit in orange, and the unit does not start.	Check the following connections: The PWR_SW on the PWRB is set to L: The LED (D19) for STB +5 V power supply for the MB on the PWRB remains unlit. The PWR_SW on the PWRB is set to H: The LED (D19) for STB +5 V power supply for the MB on the PWRB is lit.	Check the connections for the FLKB, PWRB, and MB: Reconnect or replace the 20-pin cable (DKP3637) between the PWRB and FLKB. If it is suspected that the FLKB (DWZ1164) is defective, replace it. If it is suspected that the PWRB (DWZ1129) is defective, replace it. Reconnect or replace the 20-pin cable (DKP3657) between the MB and PWRB. If it is suspected that the MB (DXF1007) is defective, replace it.
	STB_LED: Green	Even if the STB switch is pressed, its indicator remains lit in green, and the unit does not start.	Check the following connections: PWR_SW2 on the PWRB is set to L: PWR_SW2 on the PWRB is set to H: The LEDs (D11, D12, and D13) for power supply on the PWRB remain unlit. The LEDs (D11, D12, and D13) for power supply on the PWRB are lit.	Check the connections for the ATX power supply, PWRB, MB, and FLKB: Reconnect or replace the 20-pin cable (DKP3637) between the PWRB and FLKB. If it is suspected that the FLKB (DWZ1164) is defective, replace it. Reconnect or replace the 6-pin to 9-pin cable (DKP3635) between the MB and PWRB. If it is suspected that the MB (DXF1007) is defective, replace it. Reconnect the 20-pin cable of the ATX power supply (DXF1005), or replace the ATX power supply. Reconnect or replace the 20-pin cable (DKP3637) between the PWRB (CN3) and FLKB (CN501). If it is suspected that the FLKB (DWZ1164) is defective, replace it. If it is suspected that the PWRB (DWZ1129) is defective, replace it.
	Startup of the ATX power, start of the FL display		Misc.: Black screen (POST screen not displayed)	Reinstall or replace the CPU and the memory module. Clear the data in the CMOS RAM for BIOS (by short-circuiting Pins 1 and 2 of the JP14 jumper switch on the MB).
	BIOS startup	Even if the STB switch is pressed, the message on the FL display remains "PLEASE WAIT," and the unit does not start.	Check the connections (for power supply)	Check the connections between the ATX power supply and the HDD, or among the ATX power supply, PWRB, and MB: Reinstall the power supply for peripheral devices between the ATX power supply and the HDD. Or replace the ATX power supply. Reconnect or replace the 4-pin cable (DKP3656) for power supply for the CPU on the MB (PWR_P4).
			Check the connections (for signals)	Check the connections between the MB and HDD, or the MB and FLKB: Reconnect or replace the IDE flat cable (DKP3647) between the MB and HDD. Reconnect or replace the 3-pin to 10-pin cable (DKP3645) between MB and FLKB (CN504).
	Searching for the boot drive		VGA screen display "CMOS checksum error - Defaults loaded"	If the battery is discharged (2.5 V DC or less), replace it. If it is suspected that the MB (DXF1007) is defective, replace it. If checking of BIOS data fails, press the F1 key then reload the BIOS data.
			"Non-System Disk or Disk error, Replace and press any key when ready"	If the data on the HDD are damaged, reinstall the data. If it is suspected that the HDD (VXF1015) is defective, replace it.
			"Detecting IDE drivers . . . "	The settings for the connected HDD or DVD Drive are wrong: If it is suspected that the HDD (VXF1015) is defective, replace it. If it is suspected that the DVD Drive (DVR-105-PLX) is defective, replace it.
			"DISK BOOT ERROR, INSERT SYSTEM DISK AND PRESS ENTER"	Check on the BIOS screen if the HDD is recognized: Set the jumper pin of the HDD to MASTER. If it is suspected that HDD (VXF1015) is defective, replace it.
			Beep sounds: One long Two long Two short-long combinations	This means a memory error. Reinstall or replace the DDR memory module. This means a memory error. Reinstall or replace the DDR memory module. This means a video error. If it is suspected that the MB (DXF1007) is defective, replace it.
			Misc.: Noise from the HDD	If it is suspected that the HDD (VXF1015) is defective, replace it. If it is suspected that the FLKB (DWZ1164) is defective, replace it. If it is suspected that the MB (DXF1007) is defective, replace it.

Operation	Sequence	Symptom	Check Item	Measures to be taken
Startup	Execution of startup script	The following message is displayed on the FL display: "FSCK-ERROR BOOT/USR"		Reinstall the OS (Installation leaving the user's data intact is also possible).
		The following message is displayed on the FL display: "FSCK-ERROR HOME"		Reinstall the OS (Installation leaving the user's data intact is also possible).
		The following message is displayed on the FL display: "FSCK-ERROR VAR"		Reinstall the OS (Installation leaving the user's data intact is also possible).
		The following message is displayed on the FL display: "POWER ON FSCK-ERROR"		Reinstall the OS (Installation leaving the user's data intact is also possible).
		The following message is displayed on the FL display: "NO BOARD ENCODER"	Check the connections. The "Xilinx_STA" LED on the PCIB remains unlit during startup. The "Encode_STA" LED on the PCIB remains lit during startup.	Check attachment of the PCI card to the DECB and MB. It is suspected that the PCIB (DWP1080) is defective replace it. It is suspected that the PCIB (DWP1080) is defective, replace it.
			Misc.: Check the power of the PCIB (DWP1080): D2101: The LED for -12 V power supply remains unlit D2102: The LED for +12 V power supply remains unlit D2301: The LED for +5 V power supply remains unlit The message "!!!!!!!!!!NO ENCODER BOARD ERROR AGAIN!!!!!!!!!!" is displayed in the log file.	Check the LED for power supply on the PCIB (DWP1080). It is suspected that the PCIB (DWP1080) is defective, replace it. It is suspected that the PCIB (DWP1080) is defective, replace it. It is suspected that the PCIB (DWP1080) is defective, replace it. Reinstall the PCIB (DWP1080).
		The following message is displayed on the FL display: "NO BOARD ENCODER"	Check the connections. The "Xilinx_STA" LED on the DECB remains unlit during startup. The "Decode_STA" LED on the DECB remains lit during startup.	Check attachment of the PCI card to the DECB and MB. It is suspected that the DECB (DWP1081) is defective,replace it. It is suspected that the DECB (DWP1081) is defective,replace it.
			Misc.: Check the power supply for the DECB (DWP1081): The LED (D1137) for +1.8 V power supply is unlit. The message "!!!!!!!!!!NO DECODER BOARD ERROR AGAIN!!!!!!!!!!" is displayed in the log file.	Check the LED for power supply on the DECB (DWP1081). It is suspected that the DECB (DWP1081) is defective,replace it. If it is suspected that ICP (IC1351) is broken, replace it. Reinstall the DECB (DWP1081).
	Starting application	Even if the STB SW is pressed, the message on the FL display remains "000. . . ." and the unit does not start.	Check the connections: The "Xilinx_STA" LED on the AVIB remains unlit during startup. The "Encode_STA" LED on the AVIB remains lit during startup. The "Xilinx_STA" LED on the PCIB remains unlit during startup. The "Encode_STA" LED on the PCIB remains lit during startup.	Check the connections between the AVIB and PCIB. Reconnect the 50-pin FFCs (DDD1226) that connect the AVIB (CN3001 and CN3002) and PCIB (CN2103 and CN2104), or replace them. Reconnect or replace the 4-pin cable (DKP3640) that connects the AVIB (CN3301) and PCIB (CN2101). If it is suspected that the AVIB (DWV1198) is defective, replace it. If it is suspected that the AVIB (DWV1198) is defective, replace it. If it is suspected that the AVIB (DWV1198) is defective, replace it. If it is suspected that the AVIB (DWV1198) is defective, replace it.
	Completion of application startup		Misc.: Check the positions of the jumper pins in DVD Drive 1 and Drive 2.	Set the jumper pin of Drive 1 to MASTER and that of Drive 2 to SLAVE.

Operation	Symptom	Check Item	Measures to be taken
Recording/ playback	No input to the RCA, XLR, CVBS, S, YCbCr, and DV connectors (signals cannot be output or recorded during preview or recording)	Check the connections (for power supply): The LEDs for power supply (D3201, D3202, D3203, and D3204) on the AVIB remain unlit. When the AVIB (CN3201) connector is disconnected, no DC voltage is applied to the PWRB connector pin. When the AVIB (CN3201) connector is disconnected, DC voltage is applied to the PWRB connector pin. The LEDs for power supply (D7619, D7620, D7621, and D7622) on the JKIB remain unlit. When the JKIB (CN7613) connector is disconnected, no DC voltage is applied to the AVIB connector pin. When the JKIB (CN7613) connector is disconnected, DC voltage is applied to the AVIB connector pin. The LEDs for power supply (D2101, D2102, and D2301) on the PCIB remain unlit.	Check the connections for the PWRB, AVIB and JKIB, and connections between MB and PCIB: Reconnect or replace the 14-pin cable (DKP3636) between PWRB (CN2) and AVIB (CN3201). If it is suspected that the PWRB (DWZ1129) is defective, replace it. If it is suspected that the AVIB (DWV1202) is defective, replace it. Reconnect or replace the 7-pin cable (DKP3639) between AVIB (CN3201) and JKIB (CN7613). If it is suspected that the AVIB (DWV1202) is defective, replace it. If it is suspected that JKIB (DWZ1126) is defective, replace it. Securely reinstall the PCIB (DWP1080) on the MB. If it is suspected that the PCIB (DWP1080) is defective, replace it.
	No input to the RCA and XLR No input to the CVBS, S, and YCbCr connectors	Check the connections (for AV signals): No analog signal input to the AVIB connector pin Analog signal is input to the AVIB connector pin. The "Xilinx_STA" LED on the AVIB remains lit during encoding. The "Encode_STA" LED on the PCIB randomly lights during encoding.	Check the connections for the JKIB, AVIB, and PCIB: Reconnect or replace the 20-pin FFC (DDD1228) that connect AVIB (CN3501) and JKIB (CN7611). If it is suspected that JKIB (DWZ1126) is defective, replace it. If it is suspected that the AVIB (DWV1202) is defective, replace it. Reconnect or replace the two 50-pin FFCs (DDD1226) that connect the AVIB (CN3001 and CN3002) and PCIB (CN2103 and CN2104). If it is suspected that the AVIB (DWV1202) is defective, replace it. If it is suspected that the PCIB (DWP1080) is defective, replace it.
	No input to the DV connector "NO DV INPUT" displayed	The "Xilinx_STA" LED on the AVIB remains lit during encoding. The "Encode_STA" LED on the PCIB randomly lights during encoding.	Reconnect or replace the 6-pin cable (DKP3658) between the AVIB (CN4001) and JKIB (CN7402). If it is suspected that the AVIB (DWV1202) is defective, replace it. If it is suspected that the PCIB (DWP1080) is defective, replace it.
		Check which of the following will be the case: No THRU output even with the SOURCE MONITOR setting The THRU output is available with the SOURCE MONITOR setting. Playback is possible. Recording is possible.	If it is suspected that JKIB (DWZ1126) is defective, replace it. If it is suspected that the JKOB (DWZ1127) is defective, replace it. If it is suspected that the AVIB (DWV1202) is defective, replace it. If it is suspected that JKIB (DWZ1126) is defective, replace it. If it is suspected that the DECB (DWP1081) is defective, replace it.
		Check the format. Check the input source.	Check the format of connected devices. If the input source is copy-protected, it cannot be recorded.
	No output from the RCA, XLR, SPDIF, CVBS, S, YCbCr, and DV connectors (signals cannot be output during playback)	Check the connections (for power supply): The LEDs for power supply (D3201, D3202, D3203, and D3204) on the AVIB remain unlit. When the AVIB (CN3201) connector is disconnected, no DC voltage is applied to the PWRB connector pin. When the AVIB (CN3201) connector is disconnected, DC voltage is applied to the PWRB connector pin. The LEDs for power supply (D7619, D7620, D7621, and D7622) on the JKIB remain unlit. When the JKIB (CN7613) connector is disconnected, no DC voltage is applied to the AVIB connector pin. When the JKIB (CN7613) connector is disconnected, DC voltage is applied to the AVIB connector pin. The LED (D1137) for power supply on the DECB remains unlit.	Check the connections for the PWRB, AVIB, and JKIB, and connections between the MB and DECB: Reconnect or replace the 14-pin cable (DKP3636) between PWRB (CN2) and AVIB (CN3201). If it is suspected that the PWRB (DWZ1129) is defective, replace it. If it is suspected that the AVIB (DWV1202) is defective, replace it. Reconnect or replace the 7-pin cable (DKP3639) between AVIB (CN3201) and JKIB (CN7613). If it is suspected that the AVIB (DWV1202) is defective, replace it. If it is suspected that JKIB (DWZ1126) is defective, replace it. Securely reinstall the DECB (DWP1081) on the MB. If it is suspected that the DECB (DWP1081) is defective, replace it.
	No output from the RCA, XLR, and HP connectors No output from the CVBS, S, and YCbCr connectors No output from the DV connector	Check the connections (for AV signals): The "Decode_STA" LED (D1182) on the DECB remains unlit during decoding. The "Decode_STA" LED (D1182) on the DECB flashes during decoding. Check if there is analog output other than the DV output. → No Check if there is analog output other than the DV output. → Yes The THRU output is available with the SOURCE MONITOR setting. No THRU output even with the SOURCE MONITOR setting.	Check the connections for the DECB, JKIB, and JKOB: Reconnect or replace the 30-pin FFC (DDD1229) that connects the DECB (CN1811) and JKIB (CN7801). If it is suspected that the DECB (DWP1081) is defective, replace it. If it is suspected that JKIB (DWZ1126) is defective, replace it. Reconnect or replace the 6-pin cable (DKP3658) between the AVIB (CN4001) and JKIB (CN7402). Reconnect or replace the 30-pin FFC (DDD1229) that connects the AVIB (CN1651) and DECB (CN6002). Reconnect or replace the 14-pin cable (DKP3636) between PWRB (CN2) and AVIB (CN3201). If it is suspected that the AVIB (DWV1202) is defective, replace it. Reconnect or replace the 30-pin FFC (DDD1229) that connects the DECB (CN1811) and JKIB (CN7801). If it is suspected that JKIB (DWZ1126) is defective, replace it. Reconnect or replace the 30-pin FFC (DDD1230) that connects the JKIB (CN7802) and JKOB (CN7851). If it is suspected that the JKOB (DWZ1127) is defective, replace it.

Operation	Symptom	Check Item	Measures to be taken
Recording/ playback	No output from the CVBS or S terminal	Check to see if the Progressive signal is set to be output.	To change the setting, run the unit idle then press the DOWN then STOP keys.
	No video or audio output even with the SOURCE MONITOR setting	Check input/output settings. The LEDs (D3201, D3202, D3203, and D3204) for power supply on the AVIB remain unlit. Disconnect the 7-pin cable that connects the AVIB (CN3202) and JKIB (CN7613). → No DC voltage applied to the terminals Disconnect the 7-pin cable that connects the AVIB (CN3202) and JKIB (CN7613). → DC voltage applied to the terminals The LEDs (D7619, D7620, D7621, and D7622) for power supply on the JKIB remain unlit. Is the THRU_SW signals from the AVIB switched? Disconnect the 20-pin FFC cable that connects the AVIB (CN3501) and JKIB (CN7611). → THRU_SW signal from the AVIB is set to L. Disconnect the 20-pin FFC cable that connects the AVIB (CN3501) and JKIB (CN7611). → THRU_SW signal from AVIB is set to H.	On the Function menu, set AV INPUT to CVBS or RCA, then input the corresponding signal. Reconnect or replace the 14-pin cable (DKP3636) between the PWRB (CN2) and AVIB (CN3201). If it is suspected that the AVIB (DWV1202) is defective, replace it. If it is suspected that the JKIB (DWZ1126) is defective, replace it. Reconnect or replace the 7-pin cable (DKP3639) between the AVIB (CN3202) and JKIB (CN7613). If it is suspected that the JKIB (DWZ1126) is defective, replace it. Reconnect or replace the 20-pin FFC (DDD1228) that connects the AVIB (CN3501) and JKIB (CN7611). If it is suspected that the AVIB (DWV1202) is defective, replace it. If it is suspected that the JKIB (DWZ1126) is defective, replace it. Reconnect or replace the 30-pin FFC (DDD1230) that connects the JKIB (CN7802) and JKOB (CN7851). If it is suspected that the JKOB (DWZ1127) is defective, replace it.
	No HP audio output	Check the connections (for power supply): The LEDs (D3201, D3202, D3203, and D3204) for power supply on the AVIB remain unlit. Disconnect the AVIB (CN3201) connector. → No DC voltage applied to the PWRB connector pin Disconnect the AVIB (CN3201) connector. → DC voltage applied to the PWRB connector pin The LEDs (D7619, D7620, D7621, and D7622) for power supply on the JKIB remain unlit. Disconnect the AVIB (CN3202) connector. → No DC voltage applied to the AVIB connector pin Disconnect the AVIB (CN3202) connector. → DC voltage applied to the AVIB connector pin The LED (D661) for power supply on the HPVB remain unlit. Disconnect the HPVB (CN7701) connector. → No DC voltage applied to the JKIB connector pin Disconnect the HPVB (CN7701) connector. → DC voltage applied to the JKIB connector pin	Check the connections for the PWRB, AVIB, JKIB, and HPVB: Reconnect or replace the 14-pin cable (DKP3636) between the PWRB (CN2) and AVIB (CN3201). If it is suspected that the PWRB (DWZ1129) is defective, replace it. If it is suspected that the AVIB (DWV1202) is defective, replace it. Reconnect or replace the 7-pin cable (DKP3639) between the AVIB (CN3202) and JKIB (CN7613). If it is suspected that the AVIB (DWV1202) is defective, replace it. If it is suspected that the JKIB (DWZ1126) is defective, replace it. Reconnect or replace the 8-pin cable (DKP3643) between the JKIB (CN7701) and HPVB (CN661). If it is suspected that the JKIB (DWZ1126) is defective, replace it. If it is suspected that the HPVB (DWZ1128) is defective, replace it.
		Check the connections (for audio signals): Audio not output from the HP, RCA, and XLR connectors Audio not output only from the HP connector	Check the connections for the DECB, JKIB, and HPVB: Reconnect or replace the 30-pin FFC (DDD1229) that connects the DECB (CN1811) and JKIB (CN7801). If it is suspected that the DECB (DWP1081) is defective, replace it. If it is suspected that the JKIB (DWZ1126) is defective, replace it. Reconnect or replace the 8-pin cable (DKP3643) between the JKIB (CN7701) and HPVB (CN661). If it is suspected that the HPVB (DWZ1128) is defective, replace it.
	DVD recording/playback impossible	Check the connections: Press Function, and check the lower-right part of the screen to see if the connected drive is recognized. No DVD1 indication No DVD2 indication	Check the connections between the MB and DVD_Drives 1-2, and between the ATX power supply and DVD_Drives 1-2. Reconnect or replace the IDE cable (DKP3671) between MB and DRV: If it is suspected that the DVD Drive 1 (DVR-105-PLX) is defective, replace it. If it is suspected that the DVD Drive 2 (DVR-105-PLX) is defective, replace it. Reinstall the power supply for peripheral devices between the ATX power supply and the DVR. Or replace the ATX power supply.
		Check the media you use.	Use a DVD-R or DVD-RW disc whose standard is supported by this unit.
		Check the input source.	If the input source is copy-protected, it cannot be recorded.
	ENCODER ERROR "FF000002" is displayed on the screen. Preview impossible	Check the connections.	Check the connections between the AVIB and PCIB: Reconnect or replace the two 50-pin FFCs (DDD1226) that connect AVIB (CN3001 and CN3002) and PCIB (CN2103 and CN2104). If it is suspected that the AVIB (DWV1202) is defective, replace it. If it is suspected that the PCIB (DWP1081) is defective, replace it.
	No synchronization with the external sync	Check the connections: The LEDs (D7925, D7926, and D7927) for power supply on the JKDB remain unlit. Disconnect the JKDB (CN7902) connector. → No DC voltage applied to the PCIB connector pin Disconnect the JKDB (CN7902) connector. → DC voltage applied to the PCIB connector pin Check the signals.	Check the connections between the PCIB and JKDB, and between the DECB and JKDB: Reconnect or replace the 11-pin cable (DKP3642) between the PCIB (CN2102) and JKDB (CN7902). If it is suspected that the PCIB (DWP1081) is defective, replace it. If it is suspected that the JKDB (DWZ1134) is defective, replace it. Reconnect or replace the 2-pin cable (DKP3638) between the DECB (CN1471) and JKDB (CN7941).

Operation	Symptom	Check Item	Measures to be taken
Misc	No operation possible with a USB device (mouse/keyboard) connected to one of the USB connector on the front panel	Check the connections: The LED (D681) for the power supply on the USBB remains unlit: Disconnect the USBB (CN684) connector. → No DC voltage applied to the PWRB connector pin Disconnect the USBB (CN684) connector. → DC voltage applied to the PWRB connector pin Check the USB signal.	Check the connections between the PWRB and USBB, and the MB and USBB. Reconnect or replace the 3-pin cable (DKP3655) for power supply between the PWRB (CN5) and USBB (CN684). If it is suspected that the PWRB (DWZ1129) is defective, replace it. If it is suspected that the USBB (DWZ1159) is defective, replace it. Reconnect or replace the 10-pin cable (DKP3646) for USB communication between the MB and USBB (CN681). If it is suspected that the MB (DXF1007) is defective, replace it. If it is suspected that the USBB (DWZ1159) is defective, replace it.
	Control from an external device through RS-422 impossible	Check the connections: The LEDs (D7925, D7926, and D7927) for the power supply on the JKDB remains unlit: Disconnect the JKDB (CN7902) connector. → No DC voltage applied to the PCIB connector pin Disconnect the JKDB (CN7902) connector. → DC voltage applied to the PCIB connector pin Check the settings and connected devices.	Check the connections among the PCIB, JKDB, and 422IB: Reconnect or replace the 11-pin cable (DKP3642) between the PCIB (CN2102) and JKDB (CN7902). If it is suspected that the PCIB (DWP1081) is defective, replace it. If it is suspected that the JKDB (DWZ1134) is defective, replace it. Reconnect or replace the 6-pin cable (DKP3644) between the JKDB (CN7903) and 422IB (CN7952). The external RS-422 device may be one that cannot control this unit. → Refer to the Web site of Pioneer.
	Control of an external device through RS-422 impossible	Check the connections: The LEDs (D7925, D7926, and D7927) for the power supply on the JKDB remains unlit: Disconnect the JKDB (CN7902) connector. → No DC voltage applied to the PCIB connector pin Disconnect the JKDB (CN7902) connector. → DC voltage applied to the PCIB connector pin Check the settings and connected devices.	Check the connections between the PCIB and JKDB: Reconnect or replace the 11-pin cable (DKP3642) between the PCIB (CN2102) and JKDB (CN7902). If it is suspected that the PCIB (DWP1081) is defective, replace it. If it is suspected that the JKDB (DWZ1134) is defective, replace it. The external RS-422 device may be one that this unit cannot control.→ Refer to the Web site of Pioneer.
	LAN communication impossible	Check the connections. Check the settings. The LINK LED (yellow) corresponding to the LAN terminal does not light.	Connect the unit to a router, etc. with a straight cable. If NETWORK is set to OFF, set it to ON. If it is suspected that the MB (DXF1007) is defective, replace it.
	No operation of DVD-DRV1 DRV2 operates instead of DRV1	Check the connections. Press [FUNCTION] key then check the lower-right part of the screen to see if the connected drives are recognized. Check if the correct keys are pressed.	Check the connections between the MB and DVD_Drive 1, and between the ATX power supply and DVD_Drive 1. Reconnect the 4-pin power cable for the DVD-Drive 1. Reconnect or replace the IDE cable (DKP3671) between the MB and Drive 1. If it is suspected that the DVD Drive 1 (DVR-105-PLX) is defective, replace it. Reconnect or replace the 6-pin FFC (DDD1231) that connects the FLKB (CN502) and DRV1B (CN631).
	No operation of DVD-DRV2	Check the connections. Press [FUNCTION] key then check the lower-right part of the screen to see if the connected drives are recognized. Check if the correct keys are pressed.	Check the connections between the MB and DVD_Drive 2, and between the ATX power supply and DVD_Drive 2. Reconnect the 4-pin power cable for the DVD-Drive 2. Reconnect or replace the IDE cable (DKP3671) between the MB and Drive 2. If it is suspected that the DVD Drive 2 (DVR-105-PLX) is defective, replace it. Reconnect or replace the 6-pin FFC (DDD1231) that connects the KEYB (CN602) and DRV2B (CN641).
	Key input disabled, or malfunctioning	Check the connections: It is suspected that the key signals from another device remain to be input to FL UCOM (IC501) and that signals from the corresponding keyboard are not accepted. Check the key input from the remote control unit for service: As each segment on the FL display corresponds to a particular key on the remote control unit for service. If any segment on the FL display was already unlit, there had already been key input.	Check the connections among the FLKB, KEYB, DRV1B, and DRV2B: Reconnect or replace the 25-pin FFC (DDD1232) that connects the FLKB (CN503) and KEYB (CN601). Reconnect or replace the 25-pin FFC (DDD1232) that connects the FLKB (CN503) and KEYB (CN601). Reconnect or replace the 6-pin FFC (DDD1231) that connects the KEYB (CN602) and DRV2B (CN641). To enter Front-Panel-Button-Input Test mode, press the [ESC], [TEST], then [TV/LDP] keys, in that order. To quit Test mode, press the [ESC] key. Repair/replace the Assy corresponding to the inoperable key. FLKB (DWZ1164): STB, Disp, Func, Function operations (×5) KEYB (DWZ1157): Drv_Sel, Preview, Main operations (×8) DRV1B (DWZ1160): Drv1_Eject DRV2B (DWZ1161): Drv2_Eject Repair/replace the Assy.

Operation	Symptom	Check Item	Measures to be taken
Misc.	Remote control unit not effective	Check the connections: Signals from the remote control unit may not be accepted because FL UCOM (IC501), which handles those signals, is occupied with other key signals that are kept input, although the remote control signals themselves are correctly processed in the FLKB.	Check the connections among the FLKB, KEYB, DRV1B, and DRV2B: Reconnect or replace the 25-pin FFC (DDD1232) that connects the FLKB (CN503) and KEYB (CN601). Reconnect or replace the 6-pin FFC (DDD1231) that connects the FLKB (CN502) and DRV1B (CN631). Reconnect or replace the 6-pin FFC (DDD1231) that connects the FLKB (CN602) and DRV2B (CN641).
		Check key input from the remote control unit for service: Key input from the remote control unit for service is not accepted. As each segment on the FL display corresponds to a particular key of the remote control unit for service. If any segment on the FL display was already unlit, there had already been key input.	To enter Front-Panel-Button-Input Test mode, press the [ESC], [TEST], then [TV/LDP] keys, in that order. To quit Test mode, press the [ESC] key. If it is suspected that the FLKB (DWZ1164) is defective, replace it. Repair/replace the Assy corresponding to the inoperable key. FLKB (DWZ1164): STB, Disp, Func, Function operation (x5) KEYB (DWZ1157): Drv_Sel, Preview, Main operation (x8) DRV1B (DWZ1160): Drv1_Eject DRV2B (DWZ1161): Drv2_Eject Repair/replace the Assy.
	All or part of the FL display is dark, or no FL display	Check the connections.	Check the connections between the PWRB and FLKB. Reconnect or replace the 20-pin cable (DKP3637) between the PWRB and FLKB.
		Check the display on the FL display, using the remote control unit for service.	To enter LED/FL Test mode, press the [ESC], [TEST], then [P.RUN] keys, in that order. To quit Test mode, press the [ESC] key. Check the FLKB (DWZ1164) or PWRB (DWZ1129) if all or part of the FL display is dark.
		Check the power supply for the FL display.	If the power supply from the PWRB (DWZ1129) is insufficient, replace the board. IC301 : -23.4V IC401 : -26.8V IC451 : -31.2V
		Misc.	The FL (DAW1019) on the FLKB (DWZ1164) is at the end of its life. Replace the FLKB board.
Installation	Installation not completed	Check the settings and connections.	Check the connections between the MB and HDD, MB and DVD_Drive 1, and between the MB and DVD_Drive 2: The HDD (VXF1015) must be connected to Master IDE_Primary. The DVD Drive 1 (DVR-105-PLX) must be connected to Master IDE_Secondary. The DVD Drive 2 (DVR-105-PLX) must be connected to Slave IDE_Secondary.
		"DISK BOOT FAILURE, INSERT SYSTEM DISK AND PRESS ENTER" is displayed on the VGA screen.	Reinstall the OS. After replacement of the HDD, reinstall the OS.
		"!!!!!!The root file system has been recovered!!!!!!!" is displayed in the log file.	If the same message was recorded many times, reinstall the OS.
Parts	Inoperable CPU cooler	Check connections.	Check the connections between the MB and CPU_FAN, and among the ATX power supply, PWRB, and MB. Reconnect the connector for the CPU cooler.
		No power supply to the CPU cooler	Reconnect the 20-pin cable of the ATX power supply (DXF1005), or replace the ATX power supply. Reconnect or replace the 20-pin cable (DKP3657) between the MB and PWRB (CN4).
		The CPU cooler is defective.	Replace the CPU cooler.
	Inoperable fans	Check connections.	Check the connections between the PWRB and the two fans in the front section and one fan in the rear section: Reconnect or replace the 2-pin relay cable (DKP3676) that connects the PWRB (CN9) and the fan at the rear section. Reconnect the 2-pin cable that connects the PWRB (CN10) and Fan 1 at the front section, or replace the fan (AXM7014). Reconnect the 2-pin cable that connects the PWRB (CN11) and Fan 2 at the front section, or replace the fan (AXM7014).
		The FAN_DET LED (D24) on the PWRB remains unlit.	If it is suspected that the fan (AXM7014) is defective, replace it. If it is suspected that the PWRB (DWZ1129) is defective, replace it.
	The unit will not start even after MB replacement	Check connections.	Check the connections among the ATX power supply, PWRB, MB and FLKB. Check the connections between the MB and HDD.
		"CMOS checksum error-Defaults loaded" is displayed on the VGA screen.	If the BIOS data check fails, press the F1 key then reload the BIOS values.
		Check the date and time: At startup, press the [DEL] key to check the date and time on the BIOS screen (standard CMOS features). (The range of recognition at the APL level is from 2002.01.01 to 2037.12.31.)	Set the date and time according to the current Greenwich mean time.

7.1.16 DISASSEMBLY

Note 1 : Do NOT look directly into the pickup lens. The laser beam may cause eye injury.
Note 2 : When disassembling, be careful not to injure yourself with a burr, etc. Place the unit on a flat, level surface to perform servicing.
Note 3 : Even if the unit shown in the photos and illustrations in this manual may differ from your product, the procedures described here are common.

1 Bonnet Assy

① Remove the four screws.

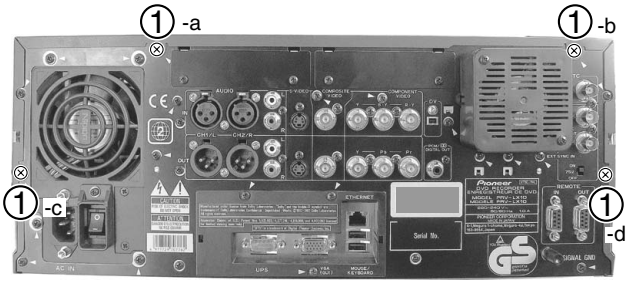

• **Rear view**

② Remove the fifteen screws.
③ Remove the bonnet Assy.

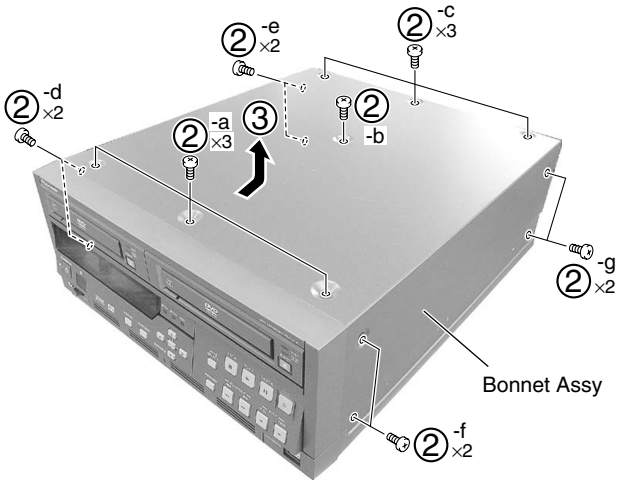

Note:
When attaching the bonnet Assy, tighten the screws in the following order:
①-a, ①-b, ②-a to ②-g, ①-c, then ①-d.

2 Tray panel Section

❶ Remove the bonnet Assy. (See step 1)

① Press the STANDBY/ON button to turn on the power.
② Press the two ⏏ EJECT buttons to open the two trays.
③ Remove the two tray panel Section.
④ Press the two ⏏ EJECT buttons to close the two trays.
⑤ Press the STANDBY/ON button to turn off the power.

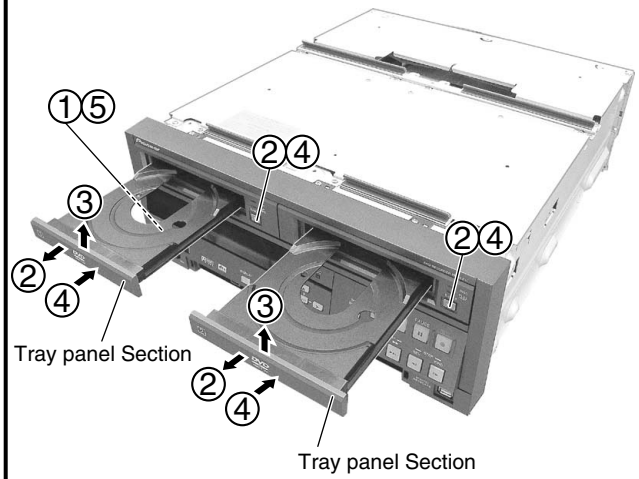

• How to open the tray when the power cannot be on

When the product cannot eject tray due to power failure or any other reasons, use a long thin pole and push the emergency eject hole under the tray panel to eject.

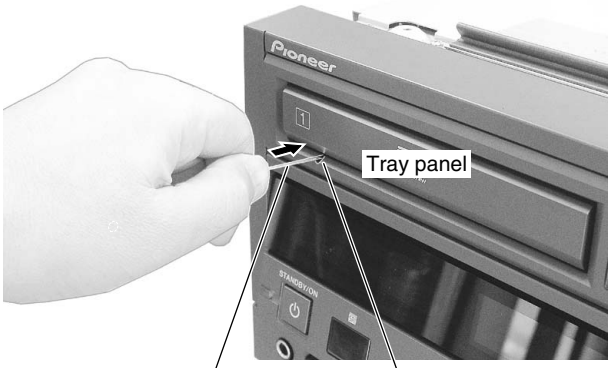

3 Front panel Section

❶ Remove the bonnet Assy. (See step 1)
❷ Remove the tray panel Section. (See step 2)

① Remove the two filter covers.
② Remove the two air filters.

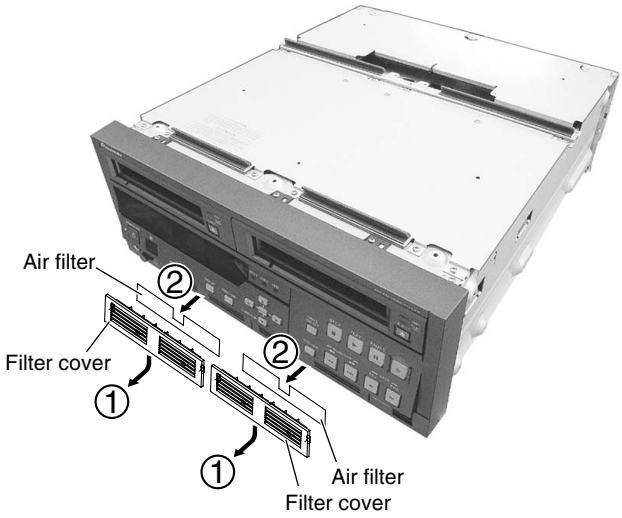

③ Remove the two screws.

④ Remove the three screws.

⑤ Unhook the five hooks.
⑥ Remove the front panel Section.

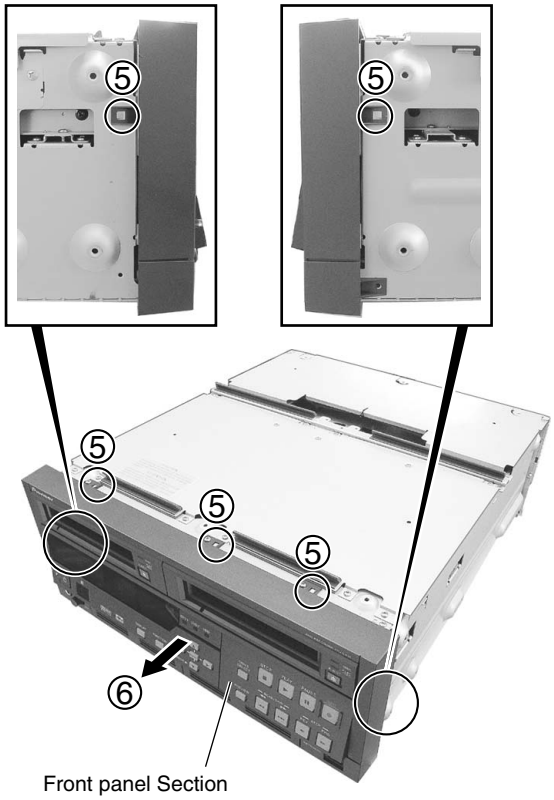

Note:

When reattaching the front panel Section to the main unit, pull the wires shown in the figure below in the direction of the arrow and adjust the length of the wires so as not to deform the shield finger.

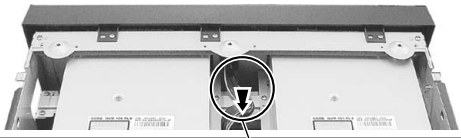

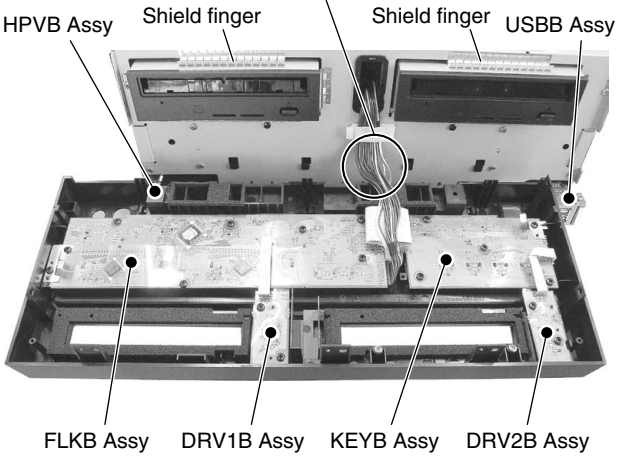

4 Inner cover F and Inner cover R

❶ Remove the bonnet Assy. (See step 1)

① Remove the six screws.

② Remove the inner cover R.

Note:

To remove the inner cover R, lift the front side of it about 30° then remove it so as not to deform the two hooks. When reattaching it, securely insert the two hooks into the two holes at the rear panel EU then slide the inner cover R about 2-3 mm toward the rear.

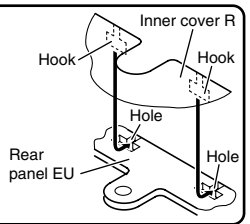

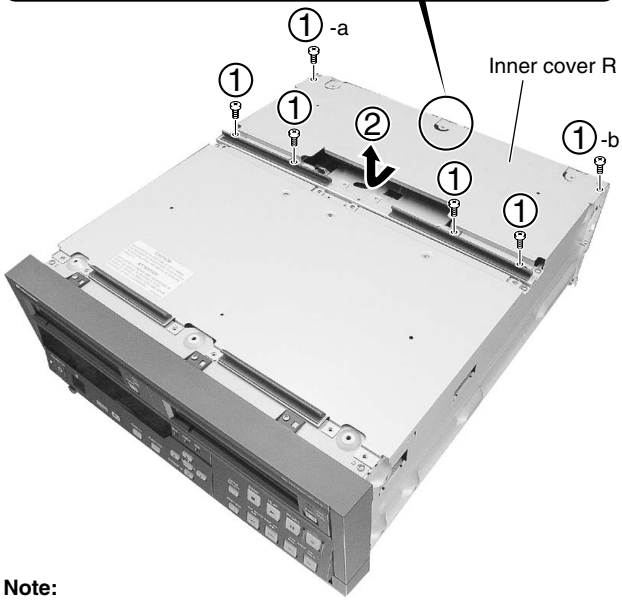

Note:

When attaching the inner cover R, tighten screws ①-a then ①-b, then tighten other screws.

③ Remove the thirteen screws.

④ Remove the inner cover F.

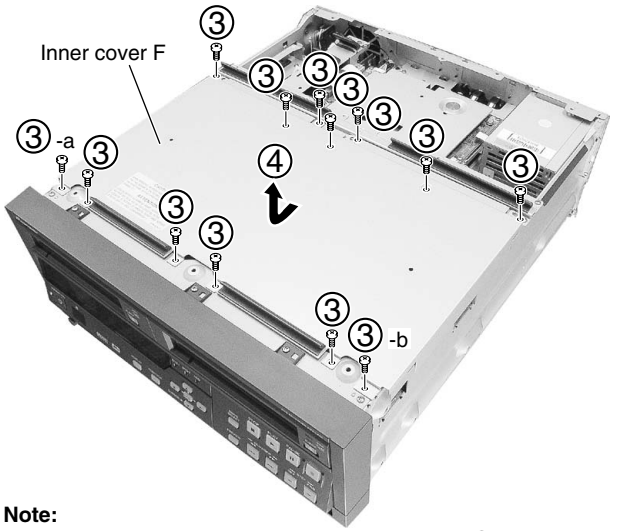

Note:

When attaching the inner cover F, tighten screws ③-a then ③-b, then tighten other screws.

5 DRIVE Assy LX1

❶ Remove the bonnet Assy. (See step 1)

❷ Remove the tray panel Section. (See step 2)

❸ Remove the inner cover F. (See step 4)

① Disconnect the four connectors.

② Remove the eight screws.

③ Remove the two DRIVE Assy LX1s.

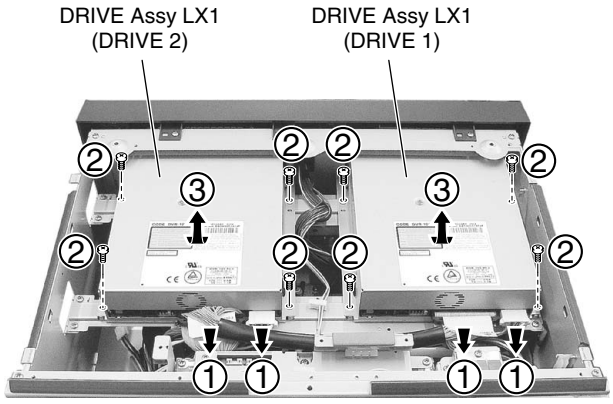

• Rear view

Note:

When disassembling/reassembling DRIVE Assy LX1, make sure that silicone spacer A is not torn or damaged. If it is, replace with a new one.

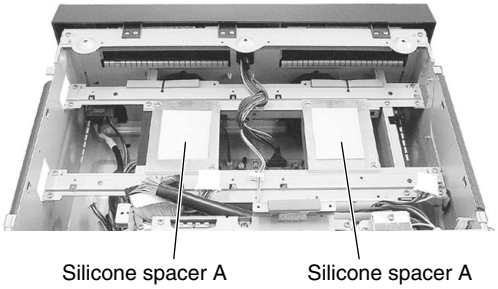

● Cleanning the pickup lens

① Remove the two screws.
② Remove the two screws.
③ Remove the drive base.

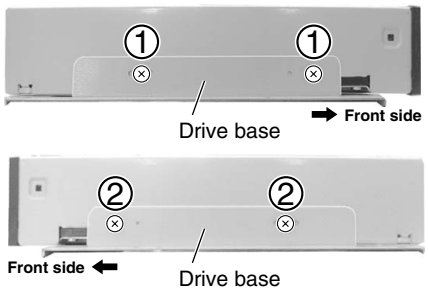

④ Remove the four screws.
⑤ Remove the low case.

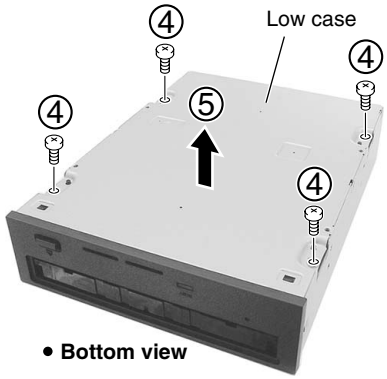

⑥ Remove the front bezel by unhooking the two hooks.
⑦ Remove the one screw.
⑧ Remove the UP case.

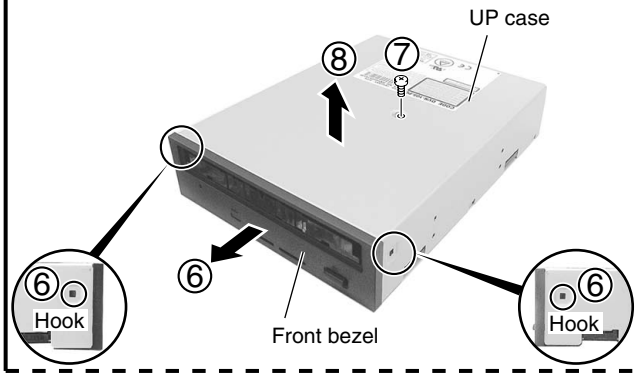

⑨ Remove the four screws.
⑩ Remove the clamper holder.

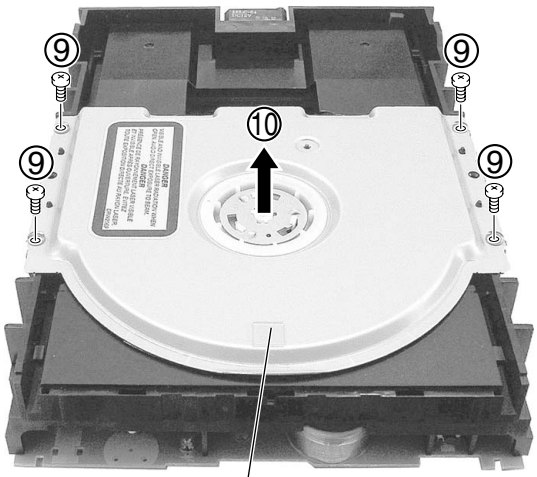

⑪ Clean the pickup lens.

Before shipment, be sure to clean the pickup lens, using the following cleaning materials:

Cleaning liquid : GEM1004
Cleaning paper : GED-008

Caution :
Do NOT look directly into the pickup lens. The laser beam may cause eye injury.

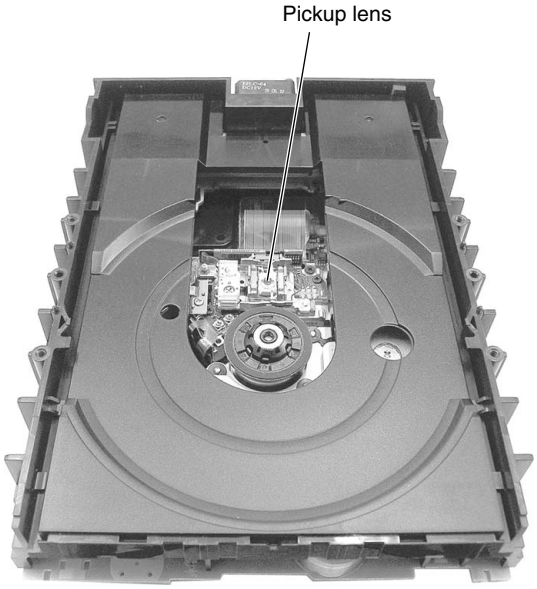

6 HDD Section

❶ Remove the bonnet Assy. (See step 1)
❷ Remove the inner cover R. (See step 4)

① Remove the six screws.
② Remove the side cover.

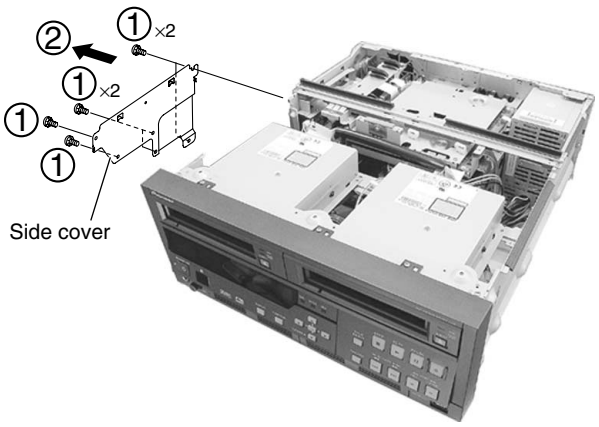

③ Remove the label.

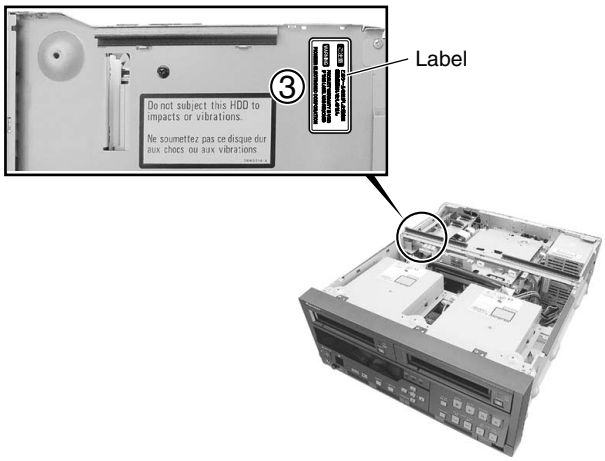

Note:

When the HDD is removed, label and attach it to cover the hole for the screw.
The label is a tamper-evident seal.
The printing on the label stuck on the product is in black, but that on the label for service is in orange.

④ Disconnect the two connectors.

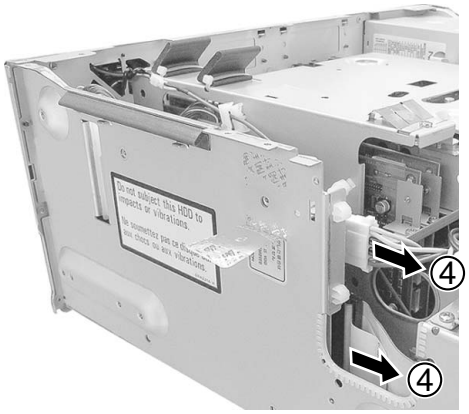

⑤ Remove the four screws.

When attaching the HDD, tighten this screw first.

⑥ Remove the HDD Section by pulling the HDD handle.

Note: When removing the HDD Section, be careful of the edges of the HDD base and HDD handle.

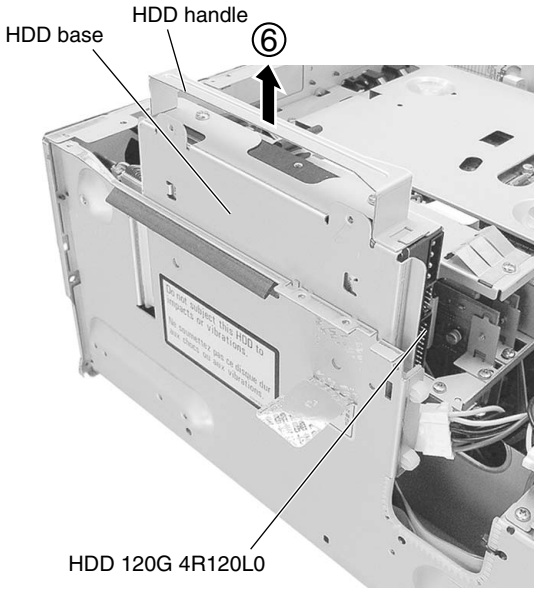

7 AVIB Assy to MOTHER BOARD Assy

❶ Remove the bonnet Assy. (See step 1)
❷ Remove the inner cover F and R. (See step 4)

1 AVIB Assy

① Remove the four screws.
② Remove the rear bridge.

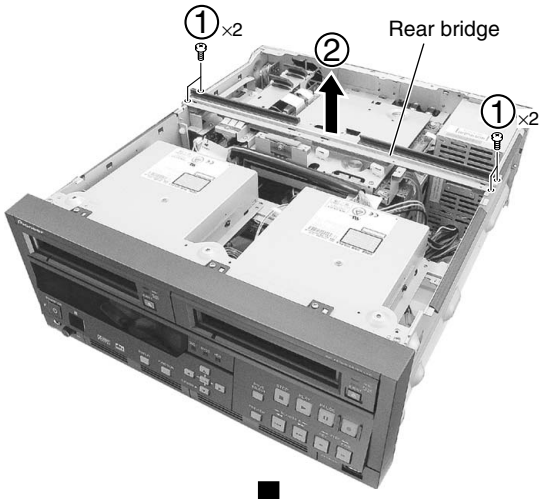

③ Remove the three screws.

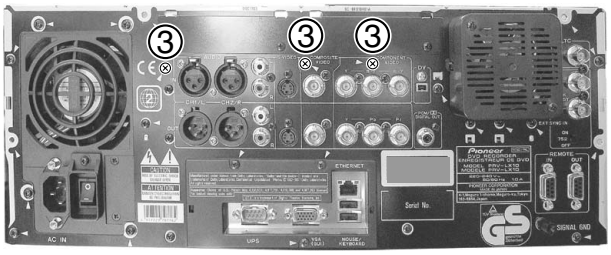

• Rear view

④ Disconnect the some connectors at need.
⑤ Remove the six screws.
⑥ Remove the AVIB Assy with AVI shield, AVI base and flexible cover.

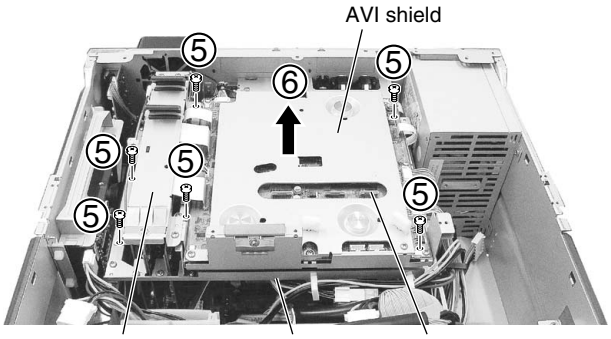

2 JKIB Assy and JKOB Assy

Note:

When replacing the JKIB and JKOB Assys, be sure to remove the 3P BNC earth plate and BNC earth plate from the old Assys and attach them to the new Assys.

① Remove the six screws.
(use with a medium-sized Phillips screwdriver.)
② Remove the fifteen screws.

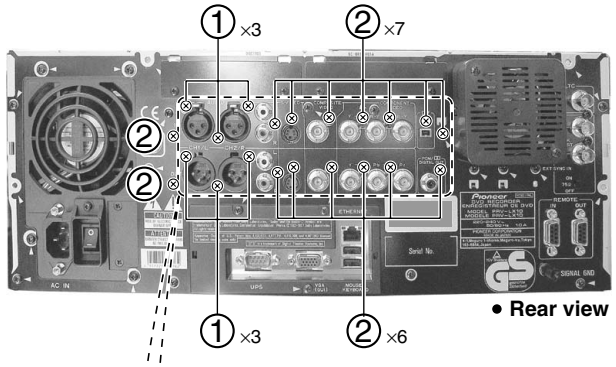

• Rear view

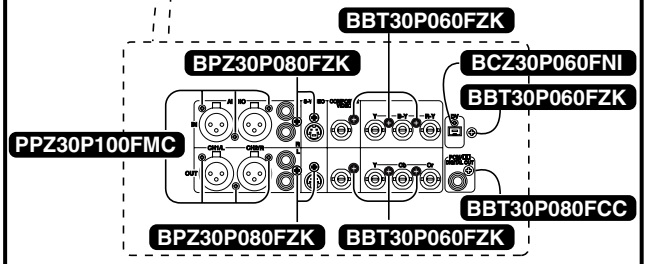

③ Disconnect the some connectors at need.
④ Remove the four screws.
⑤ Remove the JKIB Assy with PCI cover and jack stay.

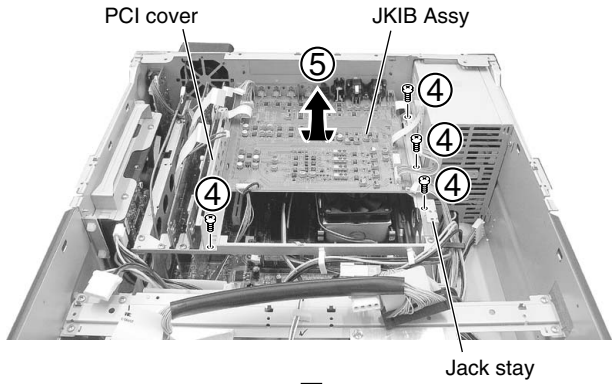

⑥ Disconnect the some connectors at need.

⑦ Remove the JKOB Assy.

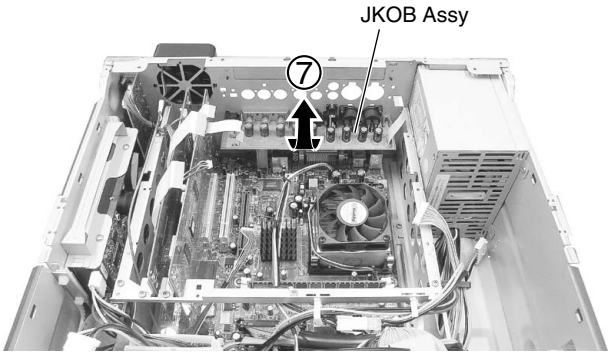

3 DECB Assy and PCIB Assy (PCI slot)

① Remove the two screws.

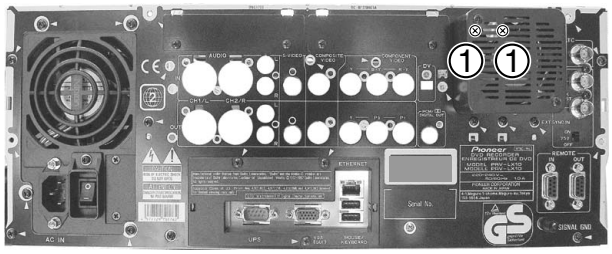

• **Rear view**

② Disconnect the some connectors at need.
③ Remove the two screws.
④ Pull out the DECB Assy from the PCI slot.
⑤ Pull out the PCIB Assy from the PCI slot.

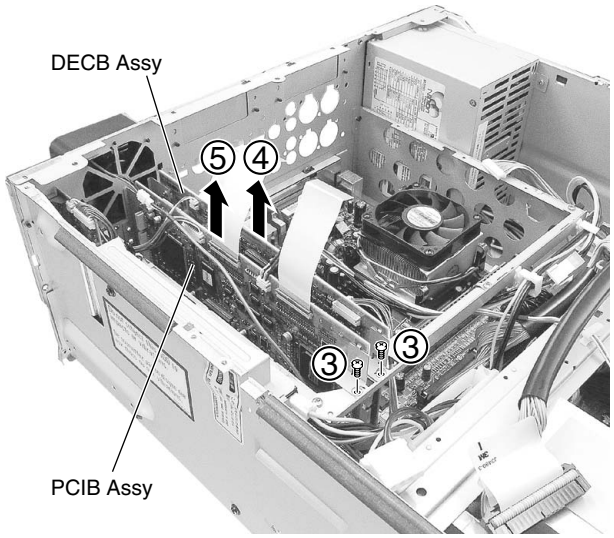

Note 1:

- After removing the DECB and PCIB Assys, be careful not to touch the edges of the PCI card.
- If the edges of the PCI card are dirty, clean the edges by IPA before reassembling.
- Make sure that dust does not become attached within the PCI slot on the MOTHER BOARD Assy.

Note 2:

After replacing the DECB and PCIB Assys, or after replacing the built-in flash ROM, be sure to reinstall the application and update the firmware.

4 MOTHER BOARD Assy

① Disconnect the some connectors at need.
② Remove the eight screws.
③ Remove the MOTHER BOARD Assy.

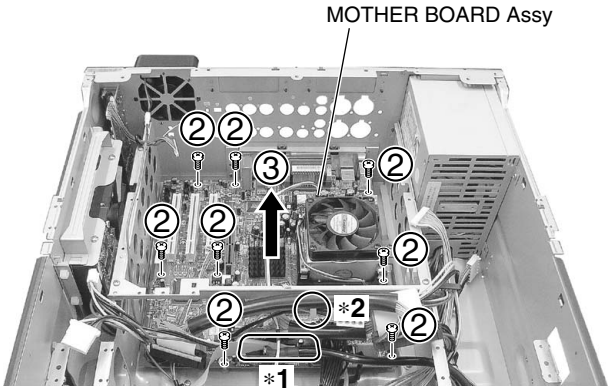

Note ∗1:

Because the IDE cable (40 pins) is fragile, care must be taken not to damage the cable with the edges when removing the MOTHER BOARD Assy.
(When dressing the IDE cable, bend the cable to 45 degrees at the joint of the connector and the cable.)

Note ∗2:

When attaching the Connector Assy 4P from the MOTHER BOARD Assy on the center stay with the holder, care must be taken so that nothing will touch the sharp edges of the center stay.

8 PWRB Assy

❶ Remove the bonnet Assy. (See step 1)
❷ Remove the tray panel Section. (See step 2)
❸ Remove the inner cover F. (See step 4)
❹ Remove the two DRIVE Assy LX1s. (See step 5)

① Release the cord holder and the wire saddle.
② Remove the twenteen screws.
③ Remove the front bridge with the heat sink Section.

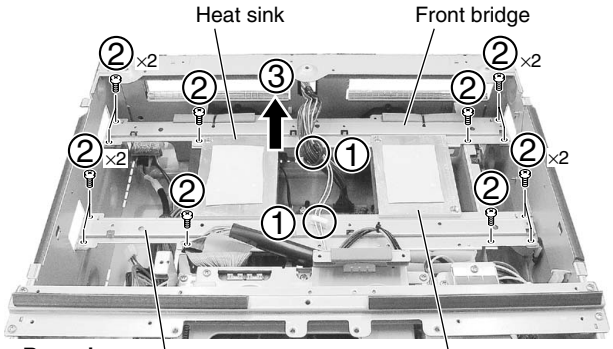

• **Rear view**

④ Disconnect the some connectors at need.
⑤ Remove the three screws.
⑥ Unhook the two card edge spacers.
⑦ Remove the PWRB Assy.

Note:
Be careful, because the connector Assy 20P is firmly attached.

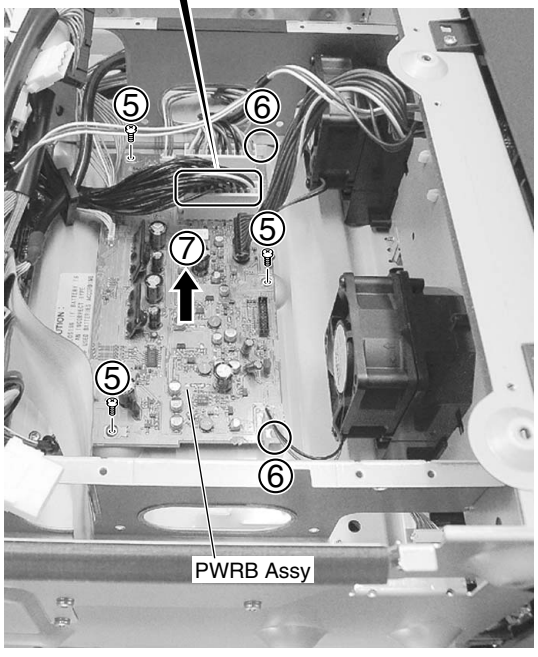

9 DC Fan motor (for rear Section)

❶ Remove the bonnet Assy. (See step 1)
❷ Remove the inner cover R. (See step 4)

① Disconnect the connector Assy 2P.
② Release the cord holder.
③ Remove the two screws. (Tighten torque : 0.65 N•m)
④ Remove the fan Section.

Note:
When reassembling, dress the wires from the fan so that they will not touch the fan.

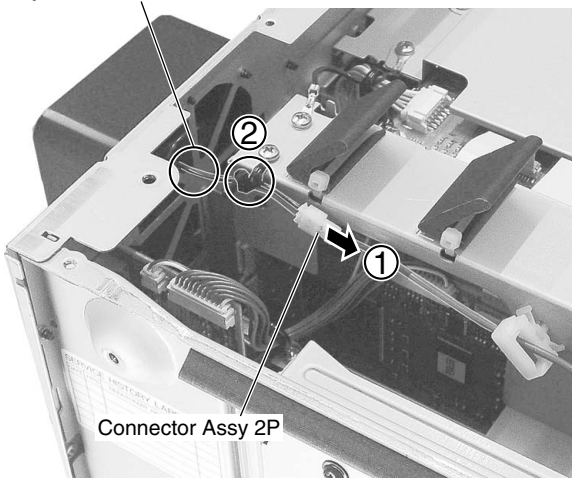

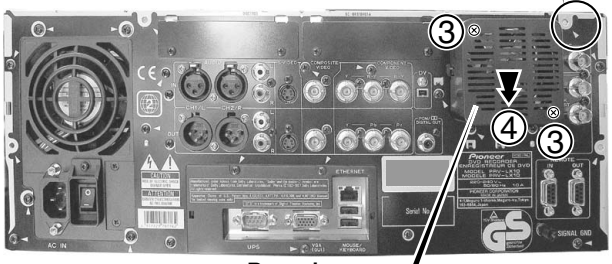

• **Rear view**

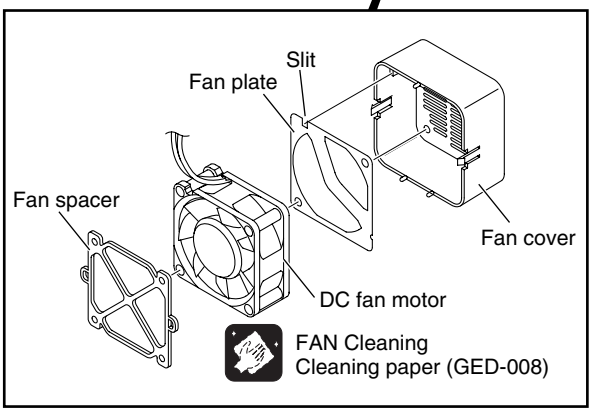

Note when replacing the DC fan motor:
Be careful handling the DC fan motor, because even a light shock to it may result in noise during operation.

10 DC Fan motor (for front Section)

❶ Remove the bonnet Assy. (See step 1)
❷ Remove the tray panel Section. (See step 2)
❸ Remove the front panel Section. (See step 3)
❹ Remove the inner cover F. (See step 4)
❺ Remove the two DRIVE Assy LX1s. (See step 5)
❻ Remove the front bridge and heat sink Section. (See step 8)

① Remove the six screws.

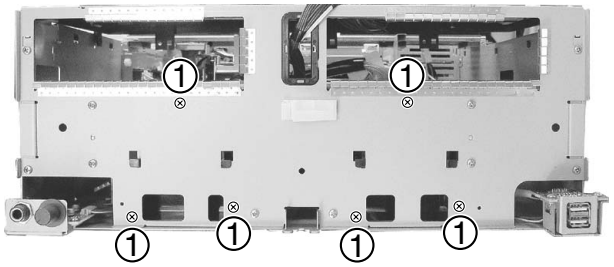

② Disconnect the two connectors.
③ Pull up the two fan Sections.
④ Remove the two fan Sections.

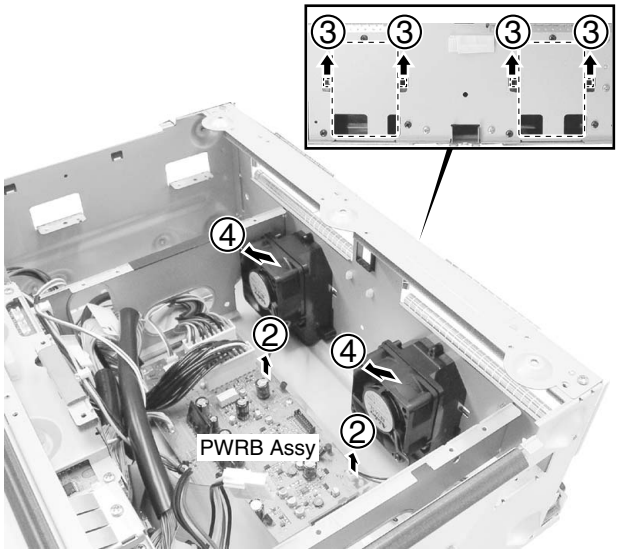

⑤ Remove the two screws.

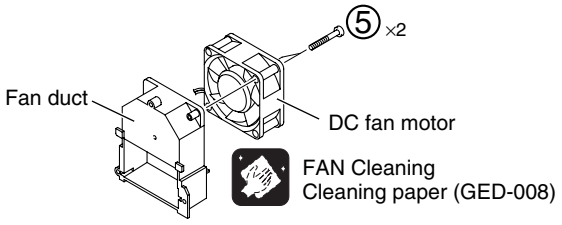

Note when replacing the DC fan motor:
Be careful handling the DC fan motor, because even a light shock to it may result in noise during operation.

11 ATX Power supply Unit

❶ Remove the bonnet Assy. (See step 1)
❷ Remove the inner cover R. (See step 4)

① Remove the one screw.
② Remove the four screws.
③ Disconnect the some connectors at need.
④ Remove the ATX Power supply Unit.

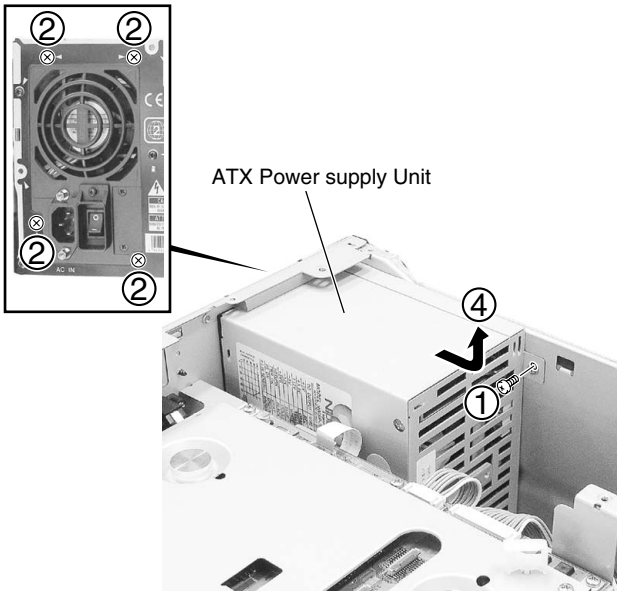

● Arrangement of the cables for the ATX Power supply Unit

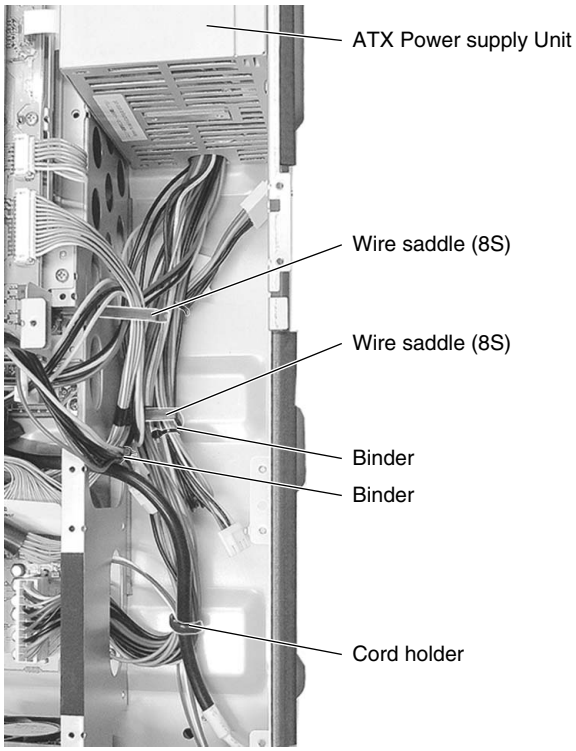

How to replace the fan in the ATX Power Supply unit

● Removing the fan

① Remove the switch-barrier fixing screw on the ATX Power Supply unit (DXF1005) then slide the switch barrier, as indicated in the figure.

Note:
Be sure to set the POWER switch to OFF and disconnect the AC power cord from the AC outlet before starting this step.

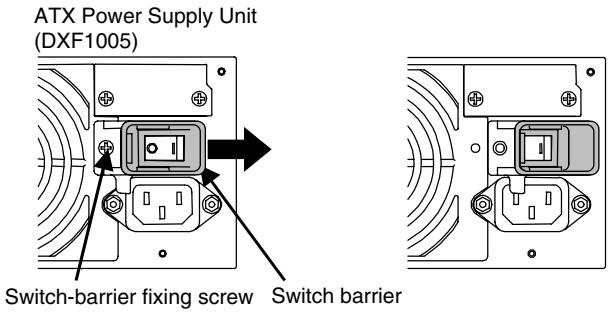

② Remove the fan guard, then remove the fan and disconnect the harness from the fan connector.

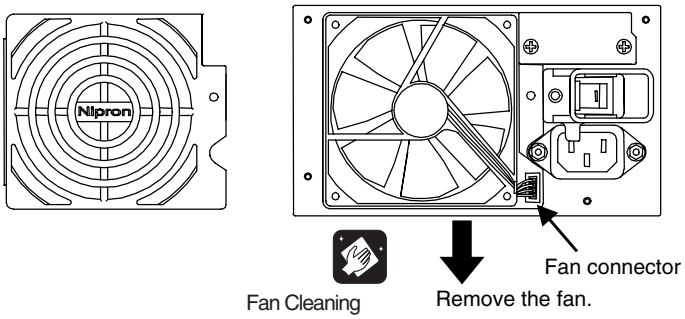

● Attaching the fan

① Connect the harness to the fan connector and install the fan into the panel. Push the harness inside.

Notes:
- Place the fan so that the name plate of the fan can be seen from the front.
- Use the Fan Unit (DZM1001) dedicated to the ATX Power Supply unit (DXF1005).

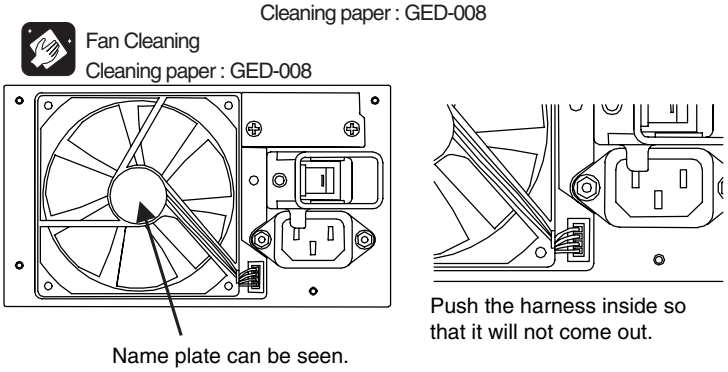

② Attach the fan guard.

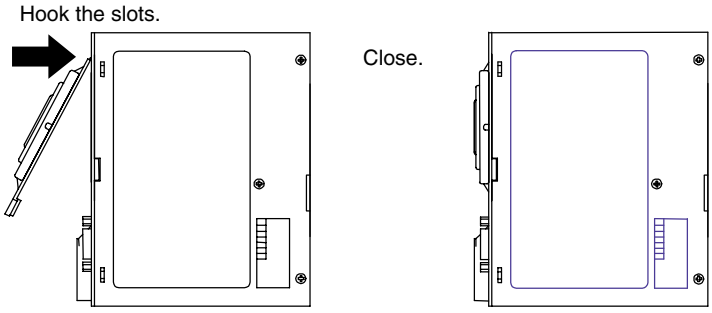

③ Slide the switch barrier and tighten the screw.

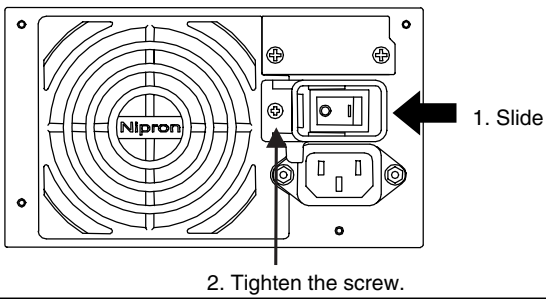

About the parts on the MOTHER BOARD Assy

On replacement of the CPU

Before reinstalling the CPU, apply the thermal compound, referring to "Notes on using the thermal compound," on the next page.

① Disconnect the cable from the connector.
② Unhook.
③ Remove the CPU fan and heat sink.
④ Lift upon the lever.
⑤ Remove the CPU.

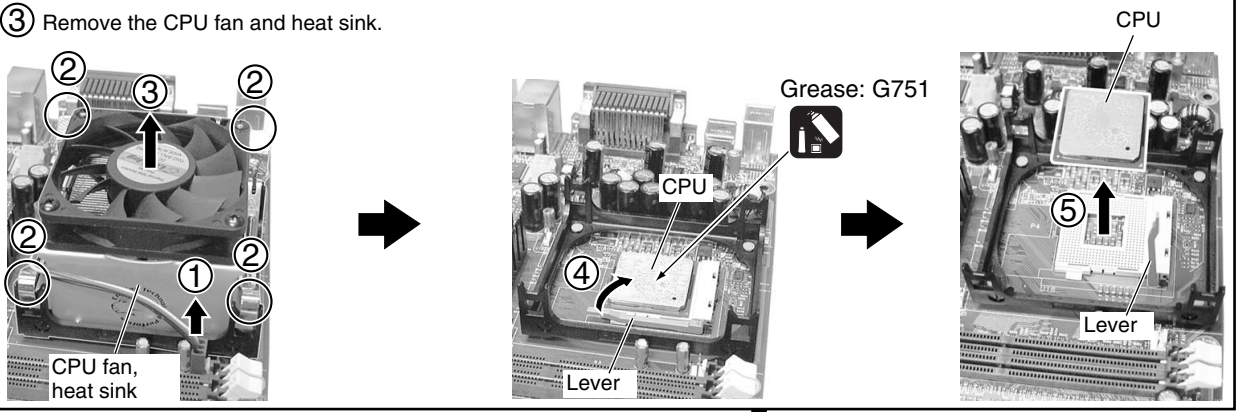

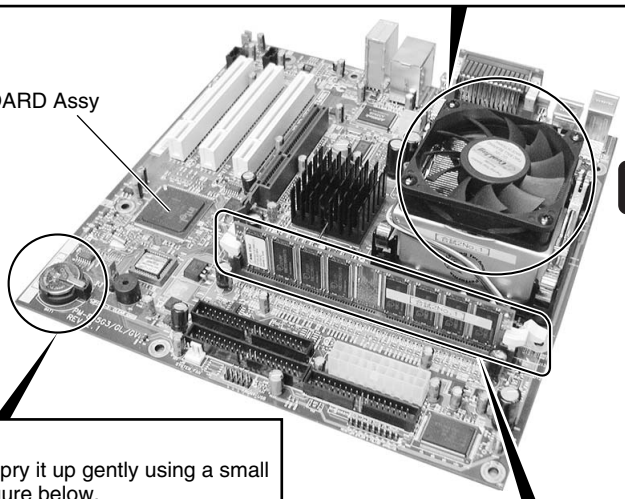

Fan Cleaning
Cleaning paper : GED-008

On the lithium battery

When removing the lithium battery, pry it up gently using a small slot screwdriver, as shown in the figure below.

Note: When removing the lithium battery, be careful that it does not touch other parts.

Lithium battery: 3.0 V CR2032
Panasonic: CR2032
Sony: CR2032
Toshiba: CR2032
Maxell: CR2032

Note: Before reinstalling the lithium battery, check its voltage, because it may have become discharged. (The cutoff voltage for the lithium battery is defined to be 2.5 V.)

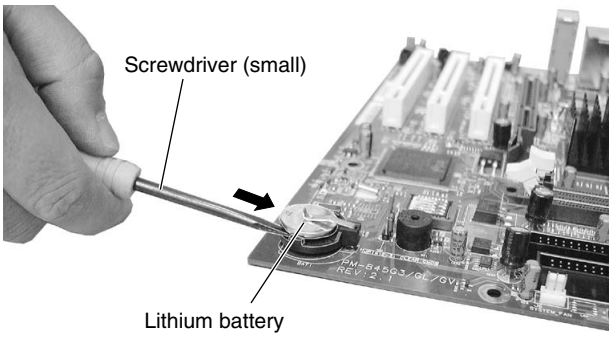

On replacement and expansion of the memory board

To remove the memory board, unhook the hooks on the both sides by pressing on them. When reattaching, align the indentation at bottom center with the corresponding notch at the slot opening and push the board in.

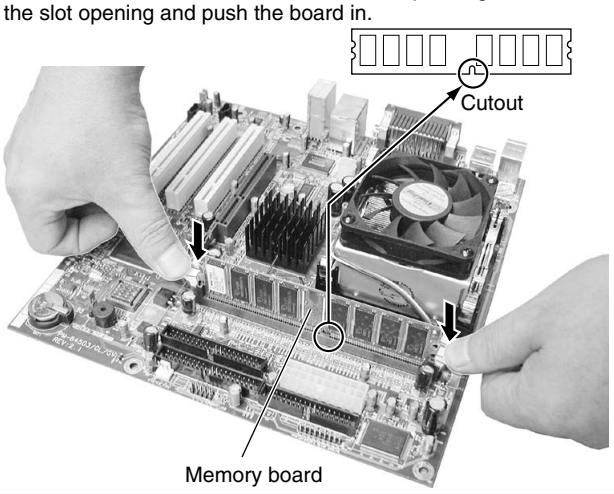

How to identify the MOTHER BOARD Assy and the ATX Power Supply Unit

MOTHER BOARD Assy

11S73P1801Z***######**

IBM Parts No. :73P1801

DXF1002-	1Z7WA
DXF1004-	1Z8CX 1Z8CZ 1Z90V
DXF1007-	1Z9V4

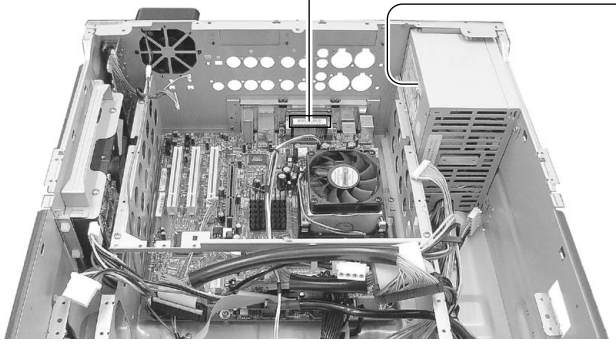

ATX Power Supply Unit

Note: The model numbers for the DXF1001 and DXF1005 are identical.

eNSP-300P-S24-00S

- Number for custom-made models by Pioneer
- Serial number for the maker

eNSP-300P-S24-00S
44••••••••
MADE IN JAPAN
A B C D E F G

**#####

DXF1001-(PRV-LX1)	A B C D E F G
DXF1005-(PRV-LX10)	B C D E F G

DXF1001-(PRV-LX1)	3####### 41###### 42###### 43######
DXF1005-(PRV-LX10)	44###### 45###### 46###### 47###### 48###### 49###### 4X###### 4Y###### 4Z###### 5#######

7.2 IC INFORMATION

• The information shown in the list is basic information and may not correspond exactly to that shown in the schematic diagrams.

● **List of IC**

PE5392B8, XC2S50-5PQ208C, HD6417709AF100B, XC2S100-5PQ208C, HD6417709AF100B, M65776AFP

■ PE5392B8 (FLKB(WYV/RB) ASSY : IC501)

• FL Microcomputer

● **Pin Function**

No.	Pin Name	I/O	Pin Function
1	SETUP2	I	Destination setting S1
2	OEM	I	Not used (default H)
3	AN17	–	Not used
4	AVSS	–	GND
5	DRV1_OPCL	I	Disc eject signal of DRIVE1 High: when S631 is pressed, Low: normally
6	DRV2_OPCL	I	Disc eject signal of DRIVE2 High: when S631 is pressed, Low: normally
7	AVREF1	I	AVref 5V
8	PCRXD	I	Receive a signal from the Mother Board
9	PCTXD	O	Transmit a signal to the Mother Board
10	P72	–	Not used
11	FD1SI	I	Not used (Data receiving from the FL driver (IC502))
12	FD1SO	O	Data transmission to the FL driver (IC502)
13	FD1SCK	O	Clock output to the FL driver (IC502)
14	FD1STB	O	Strobe output to the FL driver (IC502)
15	FD2STB	O	Strobe output to the FL driver (IC503)
16	FD2SI	I	Not used (Data receiving from the FL driver (IC503))
17	FD2SO	O	Data transmission to the FL driver (IC503)
18	FD2SCK	O	Clock output to the FL driver (IC503)
19	PS_ON_I#	I	Capture of a PS_ON signal from the Mother Board
20	PWR_OK_I	I	Capture of a PWR_OK signal from the ATX PSU
21	CHECKER	I	Assy check mode L: Assy check mode, H: Normal mode
22	AUTO_PON	I	Automatic start setting at AC ON H: Start at AC ON, L: STB at AC ON
23	FAN_DET	I	Not used (FAN detection)
24	P45	–	Not used
25	P46	–	Not used
26	P47	–	Not used
27	SIOT	I	Not used (Data I/O for temperature sensor)
28	SCT	O	Not used (Clock output for temperature sensor)
29	CST	O	Not used (Chip select for temperature sensor)
30	K_PREVIEW	I	PREVIEW key H: Normally, L: PUSH
31	K_PLAY	I	PLAY key H: Normally, L: PUSH
32	K_REC	I	REC key H: Normally, L: PUSH
33	VSS1	–	Vss1
34	K_PAUSE	I	PAUSE key H: Normally, L: PUSH
35	K_STOP	I	STOP key H: Normally, L: PUSH
36	K_DRV_SEL	I	DRIVE SELECT key H: Normally, L: PUSH
37	LD_PLAY	O	PLAY LED control H: Normally (Extinguish), L: Light
38	DRV1_DISC	O	Disc existence of DRIVE1 H: No DISC (Extinguish), L: DISC exists (Light)
39	LD_PAUSE	O	PAUSE LED control H: Normally (Extinguish), L: Light
40	DRV2_LD_ACCESS (GREEN)	O	Access LED (GREEN) control of DRIVE2 H: Normally (Extinguish), L: Light

No.	Pin Name	I/O	Pin Function
41	LD_SB	O	STANDBY/ON LED control H: Normally (Extinguish), L: Light
42	LD_ON	O	STANDBY/ON LED control H: Normally (Extinguish), L: Light
43	LD_REC	O	REC LED control H: Normally (Extinguish), L: Light
44	SIF	I	SIF (for flash writing)
45	SOF	O	SOF (for flash writing)
46	CKF	I	CKF (for flash writing)
47	LD_DRV1	O	DRIVE 1 LED control of drive select LED H: Normally (Extinguish), L: Light
48	LD_DRV2	O	DRIVE 2 LED control of drive select LED H: Normally (Extinguish), L: Light
49	LD_HDD	O	HDD LED control of drive select LED H: Normally (Extinguish), L: Light
50	DRV1_LD_ACCESS (GREEN)	O	Access LED (GREEN) control of DRIVE 1 H: Normally (Extinguish), L: Light
51	DRV1_LD_ACCESS (RED)	O	Access LED (RED) control of DRIVE 1 H: Normally (Extinguish), L: Light
52	LD_STOP	O	STOP LED control H: Normally (Extinguish), L: Light
53	DRV2_DISC	O	Disc existence of DRIVE 2: No DISC (Extinguish), L: DISC exists (Light)
54	DRV2_LD_ACCESS (RED)	O	Access LED (RED) control of DRIVE 2 H: Normally (Extinguish), L: Light
55	PON	I	STANDBY/ON key (S509) check H: PUSH, L: Normally
56	RSTBTN	I	Not used
57	PS_ON_O#	O	Output the PS_ON signal which received from the Mother Board to the ATX power
58	PWR_SW#	O	Output a relay control signal for supply +5VSB to the Mother Board
59	RESET#	O	Reset output H: Normally, L: Reset
60	XRESET	I	For flash writing
61	IRIN	I	Remote control signal receive
62	FAN_CONT1	O	FAN control for the rear
63	FAN_CONT2	O	FAN control for the DRIVE 1
64	FAN_CONT3	O	FAN control for the DRIVE 2
65	PWR_SW2#	O	Power SW signal to the Mother Board H: Normally, L: PUSH
66	P05/INTP5	–	Not used
67	VSS0	–	Not used
68	VDD1	–	Power supply 5V
69	X2	–	Crystal connection pin for clock oscillation
70	X1	I	Crystal connection pin for clock oscillation (input)
71	VPP	–	Vpp (for flash writing)
72	XT2	–	Not used
73	XT1/P07	–	Not used
74	VDD0	I	Power supply 5V
75	AVREF0	I	AVref0 5V
76	UP,DOWN,LEFT,RIGHT	I	Analog input UP: 4.25V, DOWN: 2.8V, LEFT: 1.24V, RIGHT: 0V
77	REGION	I	Destination setting R
78	K_SCAN_STEP	I	Analog input SCAN/SKIP_FWD: 4.25V, SCAN/SKIP_REV: 2.8V, STEP_FWD: 1.24V, STEP_REV: 0V
79	ENTER,SETUP,DISPLAY	I	Analog input ENTER: 4.25V, FUNCTION: 2.8V, DISPLAY: 1.24V
80	SIMUKE1	I	Destination setting S0

■ XC2S50-5PQ208C (AVIB ASSY : IC5004)

• LTC Switch FPGA

● Pin Function

No.	Pin Name	I/O	Pin Function	No.	Pin Name	I/O	Pin Function
1	GNDDI	–	GND	46	DVREQ	I	DV control signal
2	TMS	–	TEST Pin	47	DVACK	O	DV control signal
3	27MWMK	O	27MHz clock for WMIC	48	DVFRM	I	DV control signal
4	LTC IN	I	Time code input	49	WAITDVX	I	DVXcel wait signal
5	B/XS	O	Component level switch "L"=BETA, "H"=SMPTE	50	M1	I	Mode setting (pull-up)
6	RESERVE	–	Resereved	51	GNDDI	–	GND
7	THSW	O	AV through output switch "L"=Non, "H"=THROU	52	M0	I	Mode setting (ground)
8	SCL	O	For I2C communication (not used)	53	V+3_3I	–	+3.3V
9	SDA.	O	For I2C communication (not used)	54	M2	I	Mode setting (pull-up)
10	VSEL1	O	Input video switching signal "L"=CVBS, "H"=S	55	N.C.	–	Not used
11	GNDDI	–	GND	56	N.C.	–	Not used
12	V+3_3I	–	+3.3V	57	TBCLK	O	Clock for DVXceL
13	V+2_5I	–	+2.5V	58	SDICKSEL	O	Clock selection at SDI input at SDI select: H
14	VSEL2	O	Input video switching signal "L"=CV/S, "H"=TCbCr	59	DVCSEL	I	PLL gain switch of DV input at DV input: L
15	G_ADD7	I	George656 video data	60	DVOEN	I	DV control signal
16	G_ADD6	I	George656 video data	61	XWAITV	O	DV control signal
17	G_ADD5	I	George656 video data	62	WAITDVSH	O	DV control signal
18	G_ADD4	I	George656 video data	63	LXRD	I	Host bus read signal
19	GNDDI	–	GND	64	GNDDI	–	GND
20	G_ADD3	I	George656 video data	65	V+3_3I	–	+3.3V
21	G_ADD2	I	George656 video data	66	V+2_5I	–	2.5V
22	G_ADD1	I	George656 video data	67	SEL27M	O	Not used
23	G_ADD0	I	George656 video data	68	AV1_LRCK	I	Decoder audio LR clock
24	G_NONSI	I	Nonstandard 656 flag	69	AV1_BCK	I	Decoder audio clock
25	GNDDI	–	GND	70	AV1_DAI	I	Decoder audio data
26	V+3_3I	–	+3.3V	71	SDI_CHSEL	O	SDI audio switch "L"=Ch3/4, "H"=Ch1/2
27	XSELXLR	O	Audio input switching signal "L"=RCA, "H"=XLR	72	GNDDI	–	GND
28	V+2_5I	–	+2.5V	73	AES_ERROR	I	Error signal of AES/EBU signal "L"= Error exists, "H"= no error
29	ADATI	I	ADC data	74	SDI_RST	I	System reset signal to DINB
30	BCKI	I	ADC block clock	75	SDI_LOCK	I	Lock ok signal to SDI audio "L"= Unlock, "H"= Lock
31	LRCKI	I	ADC LR clock	76	V+2_5I	–	+2.5V
32	GNDDI	–	GND	77	36MFPGA	I	36.864MHz clock for audio
33	FDATI	O	Multiplex audio data	78	V+3_3I	–	+3.3V
34	FBCKI	O	Multiplex audio clock	79	GNDDI	–	GND
35	FLRCKI	O	Multiplex audio LR clock	80	40MPLD	I	40MHz clock for configuration
36	RESERVE	–	Reserved	81	AV1_D7	I	Decoder 656 video data
37	MCIF_ACKZ	I	DV acknowledge signal	82	AV1_D6	I	Decoder 656 video data
38	V+2_5I	–	+2.5V	83	AV1_D5	I	Decoder 656 video data
39	V+3_3I	–	+3.3V	84	AV1_D4	–	Decoder 656 video data
40	GNDDI	–	GND	85	GNDDI	–	GND
41	MCIF_STRBZ	O	DV strobe signal	86	AV1_D3	I	Decoder 656 video data
42	GPIO3_WM0	I	DV control signal	87	AV1_D2	–	Decoder 656 video data
43	HSDIA_AV	I	DV control signal	88	AV1_D1	I	Decoder 656 video data
44	HSDIA_EN	O	DV control signal	89	AV1_D0	–	Decoder 656 video data
45	HSDIA_CLK	O	Clock for DV (LINK) IC	90	PCC1	I	Copy protection existence flag "H" = Copy protection exists

No.	Pin Name	I/O	Pin Function	No.	Pin Name	I/O	Pin Function
91	V+2_5I	–	+2.5V	136	SDO_LRCK	O	Audio LR clock for SDIOUT
92	V+3_3I	–	+3.3V	137	GNDDI	–	GND
93	GNDDI	–	GND	138	SDI_D0	I	656 video data for SDIIN
94	27MSDO	O	27kHz clock for SDI OUT	139	SDI_D1	I	656 video data for SDIIN
95	L_A0	I	Host address bus	140	LXWE0	I	Host bus read signal
96	L_A1	I	Host address bus	141	SDI_DAI	I	Audio data for SDIIN
97	L_A2	I	Host address bus	142	L_D2	I/O	CPU Data/configuration Data
98	L_A3	I	Host address bus	143	V+2_5I	–	+2.5V
99	L_A4	I	Host address bus	144	V+3_3I	–	+3.3V
100	L_A5	I	Host address bus	145	GNDI	–	GND
101	L_A6	I	Host address bus	146	L_D1	I/O	CPU Data/configuration Data
102	L_A7	I	Host address bus	147	SDI_D2	I	656 video data for SDIIN
103	GNDDI	–	GND	148	SDI_D3	I	656 video data for SDIIN
104	DONE	I	for configuration	149	SDI_D4	I	656 video data for SDIIN
105	V+3_3I	–	+3.3V	150	SDI_D5	I	656 video data for SDIIN
106	XPROGRAM	I	for configuration	151	SDI_D6	I	656 video data for SDIIN
107	XINT	I	for configuration	152	SDI_D7	I	656 video data for SDIIN
108	L_D0	I/O	CPU Data/configuration Data	153	L_D0	I/O	CPU Data/configuration Data
109	APLILIA_DATA	I	Audio data of APLILIA output	154	ENC OK	O	LED port for operation check
110	APLILIA_BCK	I	Audio clock of APLILIA output	155	CCLK	I	for configuration
111	APLILIA_LRCK	I	Audio clock of APLILIA output	156	V+3_3I	–	+3.3V
112	AES_VALID	I	SDI N/PAL distinction signal "L"=PAL, "H"=NTSC	157	TDO	–	Not used
113	SDI_VALID	I	Valid signal of SDI signal "L"= invalid "H"= valid	158	GNDDI	–	GND
114	DINB_EXIST	I	DINB mounting existence signal "L"= nothing, "H" = exists	159	TDI	–	Not used
115	L_D6	I/O	CPU Data/configuration Data	160	LXCS40	I	Chip select from the host
116	GNDDI	–	GND	161	LXCS40	I	Chip select from the host
117	V+3_3I	–	+3.3V	162	LXCS56	I	Chip select from the host
118	V+2_5I	–	+2.5V	163	SDI_BCK	I	Audio clock for SDIIN
119	L_D5	I/O	CPU Data/configuration Data	164	SDI_LRCK	I	Audio LR clock for SDIIN
120	SDO_D0	O	656 video data for SDIOUT	165	AESI_LRCK	I	AES/EBU audio LR clock input
121	SDO_D1	O	656 video data for SDIOUT	166	AESI_BCK	I	AES/EBU audio clock input
122	SDO_D2	O	656 video data for SDIOUT	167	AESI_DAI	I	AES/EBU audio data input
123	SDO_D3	O	656 video data for SDIOUT	168	F_ADD0	O	656 video data to VAIKILT
124	GNDDI	–	GND	169	GNDDI	–	GND
125	SDO_D4	O	656 video data for SDIOUT	170	V+3_3I	–	+3.3V
126	L_D4	I/O	CPU Data/configuration Data	171	V+2_5I	–	+2.5V
127	SDO_D5	O	656 video data for SDIOUT	172	F_ADD1	O	656 video data to VAIKILT
128	V+2_5I	–	+2.5V	173	F_ADD2	O	656 video data to VAIKILT
129	SDO_D6	O	656 video data for SDIOUT	174	F_ADD3	O	656 video data to VAIKILT
130	V+3_3I	–	+3.3V	175	F_ADD4	O	656 video data to VAIKILT
131	GNDDI	–	GND	176	F_ADD5	O	656 video data to VAIKILT
132	SDO_D7	O	656 video data for SDIOUT	177	GNDDI	–	GND
133	SDO_DAI	O	Audio data for SDIOUT	178	F_ADD6	O	656 video data to VAIKILT
134	SDO_BCK	O	Audio clock for SDIOUT	179	F_ADD7	O	656 video data to VAIKILT
135	L_D3	I/O	CPU Data/configuration Data	180	F_NONSI	O	Nonstandard 656 flag to VAIKILT

No.	Pin Name	I/O	Pin Function	No.	Pin Name	I/O	Pin Function
181	SDO_ENA	O	Digital output switching signal	195	DV_VAIKILTD7	I	656 video data of VAIKILT output
182	27MFPGA	I	27MHz clock for FPGA	196	V+2_5I	–	+2.5V
183	GNDDI	–	GND	197	V+3_3I	–	+3.3V
184	V+3_3I	–	+3.3V	198	GNDDI	–	GND
185	27MDEC	I	27MHz clock of AV1 output	199	WMKD0	O	656 video data for water mark
186	V+2_5I	–	+2.5V	200	WMKD1	O	656 video data for water mark
187	DV_VAIKILTD0	I	656 video data of VAIKILT output	201	WMKD2	O	656 video data for water mark
188	DV_VAIKILTD1	I	656 video data of VAIKILT output	202	WMKD3	O	656 video data for water mark
189	DV_VAIKILTD2	I	656 video data of VAIKILT output	203	WMKD4	O	656 video data for water mark (LED port for operation check)
190	GNDDI	–	GND	204	WMKD5	O	656 video data for water mark (LED port for operation check)
191	DV_VAIKILTD3	I	656 video data of VAIKILT output	205	WMKD6	O	656 video data for water mark (LED port for operation check)
192	DV_VAIKILTD4	I	656 video data of VAIKILT output	206	WMKD7	O	656 video data for water mark (LED port for operation check)
193	DV_VAIKILTD5	I	656 video data of VAIKILT output	207	TCK	–	Not used
194	DV_VAIKILTD6	I	656 video data of VAIKILT output	208	GNDI	–	Connect to +3.3V

■ HD6417709AF100B (PCIB ASSY : IC2405)

• MPU IC

● Pin Function

No.	Pin Name	I/O	Pin Function	No.	Pin Name	I/O	Pin Function
1	MD1	I	CLK mode setting fixed to H	46	D5	I/O	Data bus
2	MD2	I	CLK mode setting fixed to H	47	VccQ	–	Core power supply (1.8V)
3	Vcc-RTC	–	Power supply for RTC (1.8V)	48	D4	I/O	Data bus
4	XTAL2	0	RTC output (32.768 kHz)	49	D3	I/O	Data bus
5	EXTAL2	I	RTC input (32.768 kHz)	50	D2	I/O	Data bus
6	Vss-RTC	–	Ground	51	D1	I/O	Data bus
7	NMI	I	NMI interruption (not used)	52	D0	I/O	Data bus
8	IREQ0	I	Not used	53	A0	O	Address bus
9	IREQ1	I	Not used	54	A1	O	Address bus
10	IREQ2	I	DVXCel interruption (L: active)	55	A2	O	Address bus
11	IREQ3	I	Audery (L: active)	56	A3	O	Address bus
12	IREQ4	I	Pcif (Xilinx) interruption (L: active)	57	VssQ	–	Ground
13	D31	I/O	Data bus	58	A4	O	Address bus
14	D30	I/O	Data bus	59	VccQ	–	Core power supply (1.8V)
15	D29	I/O	Data bus	60	A5	O	Address bus
16	D28	I/O	Data bus	61	A6	O	Address bus
17	D27	I/O	Data bus	62	A7	O	Address bus
18	D26	I/O	Data bus	63	A8	O	Address bus
19	VssQ	–	Ground	64	A9	O	Address bus
20	D25	I/O	Data bus	65	A10	O	Address bus
21	VccQ	–	Core power supply (1.8V)	66	A11	O	Address bus
22	D24	I/O	Data bus	67	A12	O	Address bus
23	D23	I/O	Data bus	68	A13	O	Address bus
24	D22	I/O	Data bus	69	VssQ	–	Ground
25	D21	I/O	Data bus	70	A14	O	Address bus
26	D20	I/O	Data bus	71	VccQ	–	Core power supply (1.8V)
27	Vss	–	Ground	72	A15	O	Address bus
28	D19	I/O	Data bus	73	A16	O	Address bus
29	Vcc	–	I/O power supply (3.3V)	74	A17	O	Address bus
30	D18	I/O	Data bus	75	A18	O	Address bus
31	D17	I/O	Data bus	76	A19	O	Address bus
32	D16	I/O	Data bus	77	A20	O	Address bus
33	VssQ	–	Ground	78	A21	O	Address bus
34	D15	I/O	Data bus	79	Vss	–	Ground
35	VccQ	–	Core power supply (1.8V)	80	A20	O	Address bus
36	D14	I/O	Data bus	81	Vcc	–	I/O power supply (3.3V)
37	D13	I/O	Data bus	82	A23	O	Address bus
38	D12	I/O	Data bus	83	VssQ	–	Ground
39	D11	I/O	Data bus	84	A24	O	Address bus
40	D10	I/O	Data bus	85	VccQ	–	Core power supply (1.8V)
41	D9	I/O	Data bus	86	A25	O	Address bus
42	D8	I/O	Data bus	87	BS	O	Starts bus cycle
43	D7	I/O	Data bus	88	RD	O	Read strobe
44	D6	I/O	Data bus	89	WE0	O	Write strobe
45	VssQ	–	Ground	90	WE1	O	Write strobe

No.	Pin Name	I/O	Pin Function	No.	Pin Name	I/O	Pin Function
91	WE2	O	Write strobe	136	TRST	I	For debugging
92	WE3	O	Write strobe	137	TMS	I	For debugging
93	RDWR	O	Read / Write	138	TDI	I	For debugging
94	AUDSYNC	O	For debugging	139	TCK	I	For debugging
95	VssQ	–	Ground	140	INTB	I	Slalom interruption (L: active)
96	CS0	O	Chip select 0	141	INTA	I	Not used
97	VccQ	–	Core power supply (1.8V)	142	INT9	I	Not used
98	CS2	O	Chip select 2	143	INT8	I	Slalom interruption (L: active)
99	CS3	O	Chip select 3	144	MD0	I	CLK mode setting fixed to H
100	CS4	O	Chip select 4	145	Vcc-PLL1	–	Power supply for PLL (1.8V)
101	CS5	O	Chip select 5	146	CAP1	–	Capacitor pin for PLL
102	CS6	O	Chip select 6	147	Vss-PLL1	–	Ground
103	DVOEN	O	DV REQ MASK	148	Vss-PLL2	–	Ground
104	XRSTAU	O	Reset for Audery	149	CAP2	–	Capacitor pin for PLL
105	CKE	O	CKE for SDRAM	150	Vcc-PLL2	–	Power supply for PLL (1.8V)
106	RAS3	O	RAS for SDRAM	151	AUDC	O	For debugging
107	N.C.	–	Not used	152	Vss	–	Ground
108	CASL	O	CAS for SDRAM	153	Vss	–	Ground
109	VssQ	–	Ground	154	Vcc	–	I/O power supply (3.3V)
110	XPHRST	O	Reset for 1394PHY	155	XTAL	O	CPU clock
111	VccQ	–	Core power supply (1.8V)	156	EXTAL	I	CPU clock
112	WMRST	O	Not used	157	DVCSEL	O	Control the output signal to LTC_SW (Xilinx) Dvexcel or ceLynx
113	LXPROGRAM	O	LTC_SW (Xilinx) configuration program signal	158	N.C.	–	Not used
114	DAC0	O	Slalom DMA ACK	159	N.C.	–	Not used
115	DAC1	O	Pcif(Xilinx)DMA ACK	160	IRQOUT	O	Interruption output
116	PPROGRAM	O	Pcif (Xilinx) configuration program signal	161	VssQ	–	Ground
117	DONE	I	PCIF (Xilinx) configuration termination signal	162	CKIO	I	System clock input (40MHz)
118	PINI	I/O	PCIF (Xilinx) configuration initial signal	163	VccQ	–	Core power supply (1.8V)
119	DRST	O	Dvxcel reset signal	164	TXD0	O	RS422 input TXD
120	TDO	O	For debugging	165	N.C.	–	Not used
121	BACK	O	Not used	166	TXD1	O	RS422 output TXD
122	BREQ	I	Not used	167	N.C.	–	Not used
123	WAIT	I	Wait signal	168	TXD2	O	RS232C TXD
124	RESET	I	Reset input	169	N.C.	–	Not used
125	N.C.	–	Not used	170	RTS2	O	RS232C RTS
126	N.C.	–	Not used	171	RXD0	I	RS422 input RXD
127	ASMD	I	For debugging	172	RXD1	I	RS422 output RXD
128	ASBR	O	For debugging	173	Vss	–	Ground
129	WDVS	I	Wait input from LTC_SW (Xilinx) Dvexcel	174	RXD2	I	RS232C RXD
130	AUD3	O	For debugging	175	Vcc	–	I/O power supply (3.3V)
131	AUD2	O	For debugging	176	CTS2	I	RS232C CTS
132	Vss	–	Ground	177	LXINIT	I/O	LTC_SW (Xilinx) configuration initial signal
133	AUD1	O	For debugging	178	LDONE	I	LTC_SW (Xilinx) configuration termination signal
134	Vcc	–	SH I/O power supply (3.3V)	179	INT5	I	Vaikilt interruption input (L: active)
135	AUD0	O	For debugging	180	INT4	I	Vaikilt interruption input (L: active)

No.	Pin Name	I/O	Pin Function	No.	Pin Name	I/O	Pin Function
181	VssQ	–	Ground	195	MD3	I	Bus width setting of area 0 fixed to H
182	PTD3	O	Status LED	196	MD4	I	Bus width setting of area 0 fixed to H
183	VccQ	–	Core power supply (1.8V)	197	MD5	I	Bus width setting of area 0 fixed to L
184	PTD2	O	Status LED	198	Avss	–	Ground
185	INT3	I	Celynx interruption input (L: active)	199	DBP0	I	Audery DBP0
186	INT2	I	Not used	200	DBP1	I	Audery DBP1
187	INT1	I	Not used	201	DBP2	I	Audery DBP2
188	INT0	I	George interruption input (L: active)	202	DBP3	I	Audery DBP3
189	PTD1	O	Status LED	203	SRER	I	SRC lock signal
190	PTD0	O	Status LED	204	WBSY	–	Not used
191	DREQ0	I	DMA REQ for Slalom	205	Avcc	–	Power supply for analog (3.3V)
192	DREQ1	I	DMA REQ for Pcif (Xilinx)	206	PTL6	–	Not used
193	RESET	I	Reset input	207	PTL7	–	Not used
194	CA	I	Chip active	208	Avss	–	Ground

■ XC2S100-5PQ208C (PCIB ASSY : IC2309)

• PCIF XILINX

● Pin Function

No.	Pin Name	I/O	Pin Function	No.	Pin Name	I/O	Pin Function
1	GND	–	Ground	46	AD06	I/O	PCI address/data
2	N.C.	–	Not used	47	AD05	I/O	PCI address/data
3	AD28	I/O	PCI address/data	48	AD04	I/O	PCI address/data
4	AD27	I/O	PCI address/data	49	AD03	I/O	PCI address/data
5	AD26	I/O	PCI address/data	50	M1	I	Configuration mode switch fixed to H
6	AD25	I/O	PCI address/data	51	GND	–	Ground
7	AD24	I/O	PCI address/data	52	M0	I	Configuration mode switch fixed to L
8	CBE3	I/O	PCI bus command / byte enable	53	VccO	–	I/O power supply (3.3V)
9	IDSE	I	PCI initialization device select	54	M2	I	Configuration mode switch fixed to H
10	AD23	I/O	PCI address/data	55	N.C.	–	Not used
11	GND	–	Ground	56	N.C.	–	Not used
12	VccO	–	I/O power supply (3.3V)	57	AD02	I/O	PCI address/data
13	Vccint	–	Core power supply (2.5V)	58	AD01	I/O	PCI address/data
14	AD22	I/O	PCI address/data	59	AD00	I/O	PCI address/data
15	AD21	I/O	PCI address/data	60	N.C.	–	Not used
16	AD20	I/O	PCI address/data	61	XBSOUT	O	Signal for LTC_SW (Xilinx) configuration
17	AD19	I/O	PCI address/data	62	WE0	I	SH write strobe
18	AD18	I/O	PCI address/data	63	N.C.	–	Not used
19	GND	–	Ground	64	GND	–	Ground
20	AD17	I/O	PCI address/data	65	VccO	–	I/O power supply (3.3V)
21	AD16	I/O	PCI address/data	66	Vccint	–	Core power supply (2.5V)
22	CBE2	I/O	PCI bus command / byte enable	67	BREQ	–	Not used
23	FRM	I/O	PCI frame	68	BACK	–	Not used
24	IRDY	I/O	PCI initiator ready	69	CASL	I	CAS for SH SDRAM
25	GND	–	Ground	70	RAS3	I	RAS for SH SDRAM
26	VccO	–	I/O power supply (3.3V)	71	CKE	I	CKE for SH SDRAM
27	TRDY	I/O	PCI target ready	72	GND	–	Ground
28	Vccint	–	Core power supply (2.5V)	73	CS3	I	SH chip select 3
29	DEV	I/O	PCI device select	74	RDWR	I	SH read/write
30	PAR	I/O	PCI parity	75	WE3	I	SH write strobe
31	CBE1	I/O	PCI bus command / byte enable	76	Vccint	–	Core power supply (2.5V)
32	GND	–	Ground	77	I.GCK1	–	Not used
33	AD15	I/O	PCI address/data	78	Vcc0	I	SH write strobe
34	AD14	I/O	PCI address/data	79	GND	–	Ground
35	AD13	I/O	PCI address/data	80	I.GCK0	I	SH system clock (40 MHz)
36	AD12	I/O	PCI address/data	81	WE2	I	SH write strobe
37	AD11	I/O	PCI address/data	82	WE1	I	SH write strobe
38	Vccint	–	Core power supply (2.5V)	83	DRQ1	0	DMA REQ for SH
39	VccO	–	I/O power supply (3.3V)	84	DAC1	I	DMA ACK for SH
40	GND	–	Ground	85	GND	–	Ground
41	AD10	I/O	PCI address/data	86	A15	I	SH address bus
42	AD09	I/O	PCI address/data	87	A14	I	SH address bus
43	AD08	I/O	PCI address/data	88	A13	I	SH address bus
44	CBE0	I/O	PCI bus command / byte enable	89	A12	I	SH address bus
45	AD07	I/O	PCI address/data	90	A11	I	SH address bus

No.	Pin Name	I/O	Pin Function	No.	Pin Name	I/O	Pin Function
91	Vccint	–	Core power supply (2.5V)	136	D17	I/O	SH data bus
92	VccO	–	I/O power supply (3.3V)	137	GND	–	Ground
93	GND	–	Ground	138	D16	I/O	SH data bus
94	A10	I	SH address bus	139	D15	I/O	SH data bus
95	A09	I	SH address bus	140	D14	I/O	SH data bus
96	A08	I	SH address bus	141	D13	I/O	SH data bus
97	A07	I	SH address bus	142	D02	I/O	SH data bus
98	A06	I	SH address bus	143	Vccint	–	Core power supply (2.5V)
99	A05	I	SH address bus	144	VccO	–	I/O power supply (3.3V)
100	A04	I	SH address bus	145	GND	–	Ground
101	A03	I	SH address bus	146	D01	I/O	SH data bus
102	A02	I	SH address bus	147	D12	I/O	SH data bus
103	GND	–	Ground	148	D11	I/O	SH data bus
104	DONE	O	PCIF (Xilinx) configuration termination signal	149	D10	I/O	SH data bus
105	VccO	–	I/O power supply (3.3V)	150	D09	I/O	SH data bus
106	PROGRAM	I	Pcif (Xilinx) configuration program signal	151	D08	I/O	SH data bus
107	PINI	I/O	PCIF (Xilinx) configuration initial signal	152	IRQOUT	–	Not used
108	D07	I/O	SH data bus	153	D00	I/O	SH data bus
109	A01	I	SH address bus	154	STATUS	O	Status LED
110	A00	I	SH address bus	155	CCLK	I	Configuration CLK (40 MHz)
111	D31	I/O	SH data bus	156	VccO	–	I/O power supply (3.3V)
112	D30	I/O	SH data bus	157	N.C.	–	Not used
113	D29	I/O	SH data bus	158	GND	–	Ground
114	D28	I/O	SH data bus	159	N.C.	–	Not used
115	D06	I/O	SH data bus	160	CS6	I	SH chip select 6
116	GND	–	Ground	161	CS6	I	SH chip select 6
117	VccO	–	I/O power supply (3.3V)	162	RD	I	SH read
118	Vccint	–	Core power supply (2.5V)	163	BS	I	SH bus start
119	D05	I/O	SH data bus	164	WAIT	O	WAIT output
120	D27	I/O	SH data bus	165	IRQ4	O	Interruption output
121	D26	I/O	SH data bus	166	N.C.	–	Not used
122	D25	I/O	SH data bus	167	SWAIT	I	WAIT input from Slalom
123	D24	I/O	SH data bus	168	KAWA_D7	–	Not used
124	GND	–	Ground	169	GND	–	Ground
125	D23	I/O	SH data bus	170	VccO	–	I/O power supply (3.3V)
126	D04	I/O	SH data bus	171	Vccint	–	Core power supply (2.5V)
127	D22	I/O	SH data bus	172	KAWA_D6	–	Not used
128	Vccint	–	Core power supply (2.5V)	173	KAWA_D5	–	Not used
129	D21	I/O	SH data bus	174	KAWA_D4	–	Not used
130	VccO	–	I/O power supply (3.3V)	175	KAWA_D3	–	Not used
131	GND	–	Ground	176	KAWA_D2	–	Not used
132	D20	I/O	SH data bus	177	GND	–	Ground
133	D19	I/O	SH data bus	178	KAWA_D1	–	Not used
134	D18	I/O	SH data bus	179	KAWA_D0	–	Not used
135	D03	I/O	SH data bus	180	KAWA_DACK	–	Not used

No.	Pin Name	I/O	Pin Function	No.	Pin Name	I/O	Pin Function
181	KAWA_DREQ	–	Not used	195	STOP	I/O	PCI stop
182	CLK27FPGA	I	27MHz CLK input	196	Vccint	–	Core power supply (2.5V)
183	GND	–	Ground	197	VccO	–	I/O power supply (3.3V)
184	VccO	–	I/O power supply (3.3V)	198	GND	–	Ground
185	CLK	I	PCI clock (33 MHz)	199	LOCK	I/O	PCI lock
186	Vccint	–	Core power supply (2.5V)	200	PERR	I/O	PCI parity error
187	PIRA	I	PCI interruption	201	SDON	I/O	PCI snoop completion
188	PIRB	I	PCI interruption	202	SBO	I/O	PCI snoop back off
189	PIRC	I	PCI interruption	203	SERR	I/O	PCI system error
190	GND	–	Ground	204	AD31	I/O	PCI address/data
191	PIRD	I	PCI interruption	205	AD30	I/O	PCI address/data
192	GNT	I/O	PCI ground	206	AD29	I/O	PCI address/data
193	REQ	I/O	PCI request	207	N.C.	–	Not used
194	PME	I	PCI power management	208	VccO	–	I/O power supply (3.3V)

■ XC2S100-5PQ208C (DECB ASSY : IC1311)

• XILINX FPGA

● Pin Function

No.	Pin Name	I/O	Pin Function	No.	Pin Name	I/O	Pin Function
1	GNDD	–	Ground	46	AD06	I/O	PCI address/data
2	RESERVE	–	Resereved	47	AD05	I/O	PCI address/data
3	AD28	I/O	PCI address/data	48	AD04	I/O	PCI address/data
4	AD27	I/O	PCI address/data	49	AD03	I/O	PCI address/data
5	AD26	I/O	PCI address/data	50	M1	I	Configuration mode switch fixed to H
6	AD25	I/O	PCI address/data	51	GNDD	–	Ground
7	AD24	I/O	PCI address/data	52	M0	I	Configuration mode switch fixed to L
8	CBE3	I/O	PCI bus command / byte enable	53	V+3M	–	I/O power supply (+3.3V)
9	IDSE	I	PCI initialization device select	54	M2	I	Configuration mode switch fixed to H
10	AD23	I/O	PCI address/data	55	N.C.	–	Not used
11	GNDD	–	Ground	56	N.C.	–	Not used
12	V+3M	–	I/O power supply (+3.3V)	57	AD02	I/O	PCI address/data
13	V+2X	–	Core power supply (+2.5V)	58	AD01	I/O	PCI address/data
14	AD22	I/O	PCI address/data	59	AD00	I/O	PCI address/data
15	AD21	I/O	PCI address/data	60	RESERVE	–	Resereved
16	AD20	I/O	PCI address/data	61	RESERVE	–	Resereved
17	AD19	I/O	PCI address/data	62	RESERVE	–	Resereved
18	AD18	I/O	PCI address/data	63	RESERVE	–	Resereved
19	GNDD	–	Ground	64	GNDD	–	Ground
20	AD17	I/O	PCI address/data	65	V+3M	–	I/O power supply (+3.3V)
21	AD16	I/O	PCI address/data	66	V+2X	–	Core power supply (+2.5V)
22	CBE3	I/O	PCI bus command / byte enable	67	RESERVE	–	Resereved
23	FRM	I/O	PCI frame	68	RESERVE	–	Resereved
24	IRDY	I/O	PCI initiator ready	69	RESERVE	–	Resereved
25	GNDD	–	Ground	70	RESERVE	–	Resereved
26	V+3M	–	I/O power supply (+3.3V)	71	RESERVE	–	Resereved
27	TRDY	I/O	PCI target ready	72	GNDD	–	Ground
28	V+2X	–	Core power supply (+2.5V)	73	RESERVE	–	Resereved
29	DEV	I/O	PCI device select	74	RESERVE	–	Resereved
30	PAR	I/O	PCI parity	75	RESERVE	–	Resereved
31	CBE1	I/O	PCI bus command / byte enable	76	V+2X	–	Core power supply (+2.5V)
32	GNDD	–	Ground	77	I.GCK1	–	Not used
33	AD15	I/O	PCI address/data	78	V+3M	–	I/O power supply (+3.3V)
34	AD14	I/O	PCI address/data	79	GNDD	–	Ground
35	AD13	I/O	PCI address/data	80	CLK40P	I	40MHz clock input (1)
36	AD12	I/O	PCI address/data	81	RESERVE	–	Resereved
37	AD11	I/O	PCI address/data	82	RESERVE	–	Resereved
38	V+2X	–	Core power supply (+2.5V)	83	DRQ1	0	DMA REQ for SH
39	V+3M	–	I/O power supply (+3.3V)	84	DAC1	I	DMA ACK for SH
40	GNDD	–	Ground	85	GNDD	–	Ground
41	AD10	I/O	PCI address/data	86	AD15	I/O	PCI address/data
42	AD09	I/O	PCI address/data	87	AD14	I/O	PCI address/data
43	AD08	I/O	PCI address/data	88	AD13	I/O	PCI address/data
44	CBE0	I/O	PCI bus command / byte enable	89	AD12	I/O	PCI address/data
45	AD07	I/O	PCI address/data	90	AD11	I/O	PCI address/data

No.	Pin Name	I/O	Pin Function	No.	Pin Name	I/O	Pin Function
91	V+2X	–	Core power supply (+2.5V)	136	D17	I/O	SH data bus
92	V+3M	–	I/O power supply (+3.3V)	137	GNDD	–	Ground
93	GNDD	–	Ground	138	D16	I/O	SH data bus
94	AD10	I/O	PCI address/data	139	D15	I/O	SH data bus
95	AD09	I/O	PCI address/data	140	D14	I/O	SH data bus
96	AD08	I/O	PCI address/data	141	D13	I/O	SH data bus
97	AD07	I/O	PCI address/data	142	D02	I/O	SH data bus
98	AD06	I/O	PCI address/data	143	V+2X	–	Core power supply (+2.5V)
99	AD05	I/O	PCI address/data	144	V+3M	–	I/O power supply (+3.3V)
100	AD04	I/O	PCI address/data	145	GNDD	–	Ground
101	AD03	I/O	PCI address/data	146	D01	I/O	SH data bus
102	AD02	I/O	PCI address/data	147	D12	I/O	SH data bus
103	GNDD	–	Ground	148	D11	I/O	SH data bus
104	DONE	O	PCIF (Xilinx) configuration termination signal	149	D10	I/O	SH data bus
105	V+3M	–	I/O power supply (+3.3V)	150	D09	I/O	SH data bus
106	SYSRST	I	Reset input	151	D08	I/O	SH data bus
107	PTE2	I/O	PCIF (Xilinx) configuration initial signal	152	D00 (IRQOUT)	–	Not used
108	D07	I/O	SH data bus	153	D00	I/O	SH data bus
109	A01	I	SH address bus	154	RESERVE (STATUS)	O	Status LED
110	A00	I	SH address bus	155	CLK40P	I	40MHz clock input (2)
111	D31	I/O	SH data bus	156	V+3M	–	I/O power supply (+3.3V)
112	D30	I/O	SH data bus	157	RESERVE	–	Resereved
113	D29	I/O	SH data bus	158	GNDD	–	Ground
114	D28	I/O	SH data bus	159	RESERVE	–	Resereved
115	D06	I/O	SH data bus	160	CS6	I	SH chip select 6
116	GNDD	–	Ground	161	WE0	I	Write enable 0 Connect to CS6
117	V+3M	–	I/O power supply (+3.3V)	162	RD	I	SH read
118	V+2X	–	Core power supply (+2.5V)	163	BS	I	SH bus start
119	D05	I/O	SH data bus	164	WAIT	O	WAIT output
120	D27	I/O	SH data bus	165	IRQ4	O	Interruption output
121	D26	I/O	SH data bus	166	RESERVE	–	Resereved
122	D25	I/O	SH data bus	167	BWAIT	I	WAIT input from AV-1
123	D24	I/O	SH data bus	168	BD7	–	MPEG bit stream output
124	GNDD	–	Ground	169	GNDD	–	Ground
125	D23	I/O	SH data bus	170	V+3M	–	I/O power supply (+3.3V)
126	D04	I/O	SH data bus	171	V+2X	–	Core power supply (+2.5V)
127	D22	I/O	SH data bus	172	BD6	–	MPEG bit stream output
128	V+2X	–	Core power supply (+2.5V)	173	BD5	–	MPEG bit stream output
129	D21	I/O	SH data bus	174	BD4	–	MPEG bit stream output
130	V+3M	–	I/O power supply (+3.3V)	175	BD3	–	MPEG bit stream output
131	GNDD	–	Ground	176	BD2	–	MPEG bit stream output
132	D20	I/O	SH data bus	177	GNDD	–	Ground
133	D19	I/O	SH data bus	178	BD1	–	MPEG bit stream output
134	D18	I/O	SH data bus	179	BD0	–	MPEG bit stream output
135	D03	I/O	SH data bus	180	BDACK	–	MPEG bit stream acknowledge

No.	Pin Name	I/O	Pin Function	No.	Pin Name	I/O	Pin Function
181	BDREQ	–	MPEG bit stream request	195	STOP	I/O	PCI stop
182	CLK27P	I	40MHz clock input	196	Vccint	–	Core power supply (2.5V)
183	GNDD	–	Ground	197	VccO	–	I/O power supply (3.3V)
184	V+3M	–	I/O power supply (+3.3V)	198	GNDD	–	Ground
185	CLK	I	PCI clock (33 MHz)	199	LOCK	I/O	PCI lock
186	V+2X	–	Core power supply (+2.5V)	200	PERR	I/O	PCI parity error
187	PIRA	I	PCI interruption	201	SDON	I/O	PCI snoop completion
188	PIRB	I	PCI interruption	202	SBO	I/O	PCI snoop back off
189	PIRC	I	PCI interruption	203	SERR	I/O	PCI system error
190	GNDD	–	Ground	204	AD31	I/O	PCI address/data
191	PIRD	I	PCI interruption	205	AD30	I/O	PCI address/data
192	GNT	I/O	PCI ground	206	AD29	I/O	PCI address/data
193	REQ	I/O	PCI request	207	RESERVE	–	Reserved
194	PME	I	PCI power management	208	V+3M	–	I/O power supply (+3.3V)

■ HD6417709AF100B (DECB ASSY : IC1211)

• MPU IC (SH-3)

● Pin Function

No.	Pin Name	I/O	Pin Function	No.	Pin Name	I/O	Pin Function
1	MD1	I	CLK mode setting (H)	46	D5	I/O	Data bus
2	MD2	I	CLK mode setting (H)	47	VccQ	–	Core power supply (+1.8V)
3	Vcc-RTC	–	Power supply for RTC (+1.8V)	48	D4	I/O	Data bus
4	XTAL2	0	RTC output (32.768 KHz)	49	D3	I/O	Data bus
5	EXTAL2	I	RTC input (32.768 KHz)	50	D2	I/O	Data bus
6	Vss-RTC	–	Ground	51	D1	I/O	Data bus
7	NMI	I	NMI interruption (Not used)	52	D0	I/O	Data bus
8	IREQ0	I	AV-1 interruption (active L)	53	A0	O	Address bus
9	IREQ1	I	AV-1 interruption (active L)	54	A1	O	Address bus
10	IREQ2	I	Not used	55	A2	O	Address bus
11	IREQ3	I	Not used	56	A3	O	Address bus
12	IREQ4	I	Pcif (Xilinx) interruption (active L)	57	VssQ	–	Ground
13	D31	I/O	Data bus	58	A4	O	Address bus
14	D30	I/O	Data bus	59	VccQ	–	Core power supply (+1.8V)
15	D29	I/O	Data bus	60	A5	O	Address bus
16	D28	I/O	Data bus	61	A6	O	Address bus
17	D27	I/O	Data bus	62	A7	O	Address bus
18	D26	I/O	Data bus	63	A8	O	Address bus
19	VssQ	–	Ground	64	A9	O	Address bus
20	D25	I/O	Data bus	65	A10	O	Address bus
21	VccQ	–	Core power supply (+1.8V)	66	A11	O	Address bus
22	D24	I/O	Data bus	67	A12	O	Address bus
23	D23	I/O	Data bus	68	A13	O	Address bus
24	D22	I/O	Data bus	69	VssQ	–	Ground
25	D21	I/O	Data bus	70	A14	O	Address bus
26	D20	I/O	Data bus	71	VccQ	–	Core power supply (+1.8V)
27	Vss	–	Ground	72	A15	O	Address bus
28	D19	I/O	Data bus	73	A16	O	Address bus
29	Vcc	–	I/O power supply (+3.3V)	74	A17	O	Address bus
30	D18	I/O	Data bus	75	A18	O	Address bus
31	D17	I/O	Data bus	76	A19	O	Address bus
32	D16	I/O	Data bus	77	A20	O	Address bus
33	VssQ	–	Ground	78	A21	O	Address bus
34	D15	I/O	Data bus	79	Vss	–	Ground
35	VccQ	–	Core power supply (+1.8V)	80	A20	O	Address bus
36	D14	I/O	Data bus	81	Vcc	–	I/O power supply (+3.3V)
37	D13	I/O	Data bus	82	A23	O	Address bus
38	D12	I/O	Data bus	83	VssQ	–	Ground
39	D11	I/O	Data bus	84	A24	O	Address bus
40	D10	I/O	Data bus	85	VccQ	–	Core power supply (+1.8V)
41	D9	I/O	Data bus	86	A25	O	Address bus
42	D8	I/O	Data bus	87	BS	O	Bus cycle start
43	D7	I/O	Data bus	88	RD	O	Read strobe
44	D6	I/O	Data bus	89	WE0	O	Write enable
45	VssQ	–	Ground	90	WE1	O	Write enable

No.	Pin Name	I/O	Pin Function	No.	Pin Name	I/O	Pin Function
91	WE2	O	Write enable	136	XTRST	I	For debugging
92	WE3	O	Write enable	137	TMS	I	For debugging
93	RDWR	O	Read / Write	138	TDI	I	For debugging
94	AUDSYC	O	For debugging	139	TCK	I	For debugging
95	VssQ	–	Ground	140	PINT11	I	Not used
96	CS0	O	Chip select 0	141	PINT10	I	Not used
97	VccQ	–	Core power supply (+1.8V)	142	PINT9	I	Not used
98	CS2	O	Chip select 2	143	PINT8	I	Not used
99	CS3	O	Chip select 3	144	SHMD0	I	CLK mode setting (H)
100	CS4	O	Chip select 4	145	Vcc-PLL1	–	Power supply for PLL (+1.8V)
101	CS5	O	Chip select 5	146	CAP1	–	Capacitor pin for PLL
102	CS6	O	Chip select 6	147	Vss-PLL1	–	Ground
103	AV1RST	O	AV-1 reset	148	Vss-PLL2	–	Ground
104	CE2B	–	Not used	149	CAP2	–	Capacitor pin for PLL
105	CKE	O	CKE for SDRAM	150	Vcc-PLL2	–	Power supply for PLL (+1.8V)
106	RAS3L	O	RAS for SDRAM	151	AUDCK	O	For debugging
107	SDA1	O	Video encoder (IC1711) SDA	152	Vss	–	Ground
108	CASLL	O	CAS for SDRAM	153	Vss	–	Ground
109	VssQ	–	Ground	154	Vcc	–	I/O power supply (+3.3V)
110	XPHRST	O	Reset for 1394PHY	155	XTAL	O	CPU clock
111	VccQ	–	Core power supply (+1.8V)	156	EXTAL	I	CPU clock
112	SQZ	O	Squeeze signal	157	PALNTSC	O	PAL/NTSC selection control signal
113	CASHH	–	Not used	158	PXRST	O	Video encoder (IC1711) reset
114	DACK0	–	Not used	159	FSEL	O	16M clock selection control signal
115	XDAC1	O	Pcif (Xilinx) DMA ACK	160	IRQOUT	O	Interruption output (Not used)
116	SCL1	O	Video encoder (IC1711) SCL	161	VssQ	–	Ground
117	DONE	I	PCIF (Xilinx) configuration termination signal	162	CLK40S	I	System clock input (40MHz)
118	PTE2	O	Pcif (Xilinx) configuration program signal	163	VccQ	–	Core power supply (+1.8V)
119	LTR	O	Letter box signal	164	TXD0	–	Not used
120	TDO	O	For debugging	165	SCK0	–	Not used
121	BACK	O	Not used	166	TXD1	–	Not used
122	BREQ	I	Not used	167	SCK1	–	Not used
123	XWAIT	I	Wait input (Xilinx)	168	TXD2	O	RS232C TXD
124	SYSRST	I	Reset input	169	SCK2	–	Not used
125	N.C.	–	Not used	170	RTS2	O	RS232C RTS
126	N.C.	–	Not used	171	RXD0	–	Not used
127	ASEMD0	I	For debugging	172	RXD1	–	Not used
128	XASKAK	O	For debugging	173	Vss	–	Ground
129	N.C.	–	Not used	174	RXD2	I	RS232C RXD
130	ADATA3	O	For debugging	175	Vcc	–	I/O power supply (+3.3V)
131	ADATA2	O	For debugging	176	CTS2	I	RS232C CTS
132	Vss	–	Ground	177	MCS7	–	Not used
133	ADATA1	O	For debugging	178	MCS6	–	Not used
134	Vcc	–	SH I/O power supply (+3.3V)	179	ADJ/SYNC	O	Control signal of asynchronous / external synchronous selection
135	ADATA0	O	For debugging	180	INT/EXT	O	Control signal of 27MHz clock internal / external selection

No.	Pin Name	I/O	Pin Function	No.	Pin Name	I/O	Pin Function
181	VssQ	–	Ground	195	SHMD3	I	Bus width setting of area 0 fixed to L
182	PTD3	O	Status LED	196	SHMD4	I	Bus width setting of area 0 fixed to H
183	VccQ	–	Core power supply (+1.8V)	197	SHMD5	I	Bus width setting of area 0 fixed to L
184	PTD2	O	Status LED	198	Avss	–	Ground
185	P/XI	O	Progressive / interlace	199	XCYNCIN	I	External synchronous flag input
186	CPP2	O	Copy inhibit signal for internal control	200	AN1	–	Not used
187	MCS1	–	Not used	201	AN2	–	Not used
188	CPP1	O	Copy inhibit signal for external output	202	AN3	–	Not used
189	PTD1	O	Status LED	203	AN4	–	Not used
190	PTD0	O	Status LED	204	AN5	–	Not used
191	XDREQ	I	DMA REQ for AV-1	205	Avcc	–	Power supply for analog (+3.3V)
192	XDREQ1	I	DMA REQ for Pcif (Xilinx)	206	AN6	–	Not used
193	SYSRST	I	Reset input	207	AN7	–	Not used
194	CA	I	Chip active (H)	208	Avss	–	Ground

■ M65776AFP (DECB ASSY : IC1513)

• AV-1

● Pin Function

No.	Pin Name	I/O	Pin Function	No.	Pin Name	I/O	Pin Function
1	GND	–	Ground	46	RDY	O	Data ready
2	BCLK	I	Bit stream clock	47	INT1	O	Interruption request
3	BDEN	I	Not used	48	INT2	O	Interruption request
4	BDREQ	0	Bit stream request	49	INT3	O	Interruption request
5	BSECH	I	Not used	50	GND	–	Ground
6	HD<0>	I/O	Data input/output	51	DREQ	O	DMA request
7	HD<1>	I/O	Data input/output	52	DACK	I	DMA acknowledge
8	HD<2>	I/O	Data input/output	53	MA<3>	O	SDRAM address
9	HD<3>	I/O	Data input/output	54	MA<4>	O	SDRAM address
10	HD<4>	I/O	Data input/output	55	MA<2>	O	SDRAM address
11	HD<5>	I/O	Data input/output	56	VDD18	–	Power supply for internal circuit (+1.8V)
12	VDD18	–	Power supply for internal circuit (+1.8V)	57	VDD33	–	I/O power supply (+3.3V)
13	VDD33	–	I/O power supply (+3.3V)	58	MA<5>	O	SDRAM address
14	HD<6>	I/O	Data input/output	59	MA<1>	O	SDRAM address
15	HD<7>	I/O	Data input/output	60	MA<6>	O	SDRAM address
16	HD<8>	I/O	Data input/output	61	MA<0>	O	SDRAM address
17	HD<9>	I/O	Data input/output	62	MA<7>	O	SDRAM address
18	HD<10>	I/O	Data input/output	63	MA<10>	O	SDRAM address
19	HD<11>	I/O	Data input/output	64	GND	–	Ground
20	GND	–	Ground	65	MA<8>	O	SDRAM address
21	HD<12>	I/O	Data input/output	66	MBA[1]	O	SDRAM bank selection
22	HD<13>	I/O	Data input/output	67	MA<9>	O	SDRAM address
23	HD<14>	I/O	Data input/output	68	MBA[0]	O	SDRAM bank selection
24	HD<15>	I/O	Data input/output	69	MA<11>	O	SDRAM address
25	HA<0>	I	Address input	70	DCS	O	SDRAM chip selection
26	HA<1>	I	Address input	71	VDD18	–	Power supply for internal circuit (+1.8V)
27	VDD18	–	Power supply for internal circuit (+1.8V)	72	VDD33	–	I/O power supply (+3.3V)
28	VDD33	–	I/O power supply (+3.3V)	73	DCS2	O	SDRAM chip selection
29	HA<2>	I	Address input	74	DCS3	O	SDRAM chip selection
30	HA<3>	I	Address input	75	DCS4	O	SDRAM chip selection
31	HA<4>	I	Address input	76	DCS5	O	SDRAM chip selection
32	HA<5>	I	Address input	77	RAS	O	SDRAM-RAS
33	HA<6>	I	Address input	78	CAS	O	SDRAM-CAS
34	HA<7>	I	Address input	79	MCLK	O	SDRAM clock
35	GND	–	Ground	80	DWE	O	SDRAM write enable
36	HA<8>	I	Address input	81	GND	–	Ground
37	HA<9>	I	Address input	82	DQMU	O	SDRAM-DQM upper byte
38	HA<10>	I	Address input	83	DQML	O	SDRAM-DQM lower byte
39	HA<11>	I	Address input	84	MD<7>	I/O	SDRAM data input/output
40	CS	I	Chip select	85	MD<8>	I/O	SDRAM data input/output
41	RE	I	Read enable	86	MD<6>	I/O	SDRAM data input/output
42	VDD18	–	Power supply for internal circuit (+1.8V)	87	MD<9>	I/O	SDRAM data input/output
43	VDD33	–	I/O power supply (+3.3V)	88	VDD18	–	Power supply for internal circuit (+1.8V)
44	WE	I	Write enable	89	VDD33	–	I/O power supply (+3.3V)
45	BHE	I	Byte high enable	90	MD<5>	I/O	SDRAM data input/output

No.	Pin Name	I/O	Pin Function	No.	Pin Name	I/O	Pin Function
91	MD<10>	I/O	SDRAM data input/output	136	N.C.	–	Not used
92	MD<4>	I/O	SDRAM data input/output	137	N.C.	–	Not used
93	MD<11>	I/O	SDRAM data input/output	138	N.C.	–	Not used
94	MD<3>	I/O	SDRAM data input/output	139	N.C.	–	Not used
95	MD<12>	I/O	SDRAM data input/output	140	N.C.	–	Not used
96	GND	–	Ground	141	N.C.	–	Not used
97	MD<2>	I/O	SDRAM data input/output	142	N.C.	–	Not used
98	MD<13>	I/O	SDRAM data input/output	143	N.C.	–	Not used
99	MD<1>	I/O	SDRAM data input/output	144	N.C.	–	Not used
100	MD<14>	I/O	SDRAM data input/output	145	GND	–	Ground
101	MD<0>	I/O	SDRAM data input/output	146	N.C.	–	Not used
102	MD<15>	I/O	SDRAM data input/output	147	N.C.	–	Not used
103	VDD18	–	Power supply for internal circuit (+1.8V)	148	N.C.	–	Not used
104	VDD33	–	I/O power supply (+3.3V)	149	N.C.	–	Not used
105	CLKO	O	27MHz clcok output	150	N.C.	–	Not used
106	CLKI	I	27MHz clock input	151	N.C.	–	Not used
107	AVDD18	–	Power supply for internal PLL (+1.8V)	152	N.C.	–	Not used
108	AGND18	–	Ground for internal PLL	153	N.C.	–	Not used
109	N.C.	–	Not used	154	N.C.	–	Not used
110	N.C.	–	Not used	155	VDD18	–	Power supply for internal circuit (+1.8V)
111	N.C.	–	Not used	156	VDD33	–	I/O power supply (+3.3V)
112	GND	–	Ground	157	N.C.	–	Not used
113	AVDD33	–	Analog power supply (+3.3V)	158	N.C.	–	Not used
114	DAOUTB	–	Not used (connect to ground)	159	LRCLK	O	Audio channel distinction clock
115	AVRI	I	Reference voltage	160	CDLRCLK	I	Not used
116	PAB	O	Pb current output	161	CDBCK	I	Not used
117	IREF	I	Reference current	162	CDDATA	I	Not used
118	BIAS2	I	Bias voltage for power source	163	CDDIN	I	Not used
119	PAY	O	Y (progressive) current output	164	AO0	O	PCM serial data for DAC
120	BIAS1	I	Bias voltage for power source	165	GND	–	Ground
121	AVDD33	–	Analog power supply (+3.3V)	166	AO1	O	PCM serial data for DAC (Not used)
122	PAR	O	Pr current output	167	AO2	O	PCM serial data for DAC (Not used)
123	AVDD33	–	Analog power supply (+3.3V)	168	AOD	O	PCM serial data for DAC (Not used)
124	AGND33	–	Analog ground	169	AAD	O	Not used
125	GND	–	Ground	170	DOUT0	O	Digital audio (S/PDIF) output
126	N.C.	–	Not used	171	DOUT1	O	S/PDIF output (Not used)
127	N.C.	–	Not used	172	ACLKI	I	Audio clock
128	N.C.	–	Not used	173	DACCLK	O	DAC oversampling operating clock (Not used)
129	N.C.	–	Not used	174	VDD18	–	Power supply for internal circuit (+1.8V)
130	N.C.	–	Not used	175	VDD33	–	I/O power supply (+3.3V)
131	N.C.	–	Not used	176	DOCLK	O	PCM bit clock
132	N.C.	–	Not used	177	PWD	O	Phase comparator output of external sync. signal
133	N.C.	–	Not used	178	CSYNC	I	Composite SYNC signal input
134	VDD18	–	Power supply for internal circuit (+1.8V)	179	OSDKEY	O	Not used
135	VDD33	–	I/O power supply (+3.3V)	180	VSYNC	O	Vertical sync. signal output

No.	Pin Name	I/O	Pin Function	No.	Pin Name	I/O	Pin Function
181	HSYNC	O	Horizontal sync. signal output	195	HMODE<1>	I	Mode setting input (H)
182	PXCLKP	O	54MHz pixel clock	196	TEST[0]	I	Not used (L)
183	PXCLK	O	27MHz pixel clock	197	TEST[1]	I	Not used (L)
184	PD<0>	O	Digital pixel data	198	VDD18	–	Power supply for internal circuit (+1.8V)
185	PD<1>	O	Digital pixel data	199	VDD33	–	I/O power supply (+3.3V)
186	PD<2>	O	Digital pixel data	200	TEST[2]	I	Not used (L)
187	GND	–	Ground	201	BD<0>	I	Bit stream data input
188	PD<3>	O	Digital pixel data	202	BD<1>	I	Bit stream data input
189	PD<4>	O	Digital pixel data	203	BD<2>	I	Bit stream data input
190	PD<5>	O	Digital pixel data	204	BD<3>	I	Bit stream data input
191	PD<6>	O	Digital pixel data	205	BD<4>	I	Bit stream data input
192	PD<7>	O	Digital pixel data	206	BD<5>	I	Bit stream data input
193	RESET	I	SH-3 AV1RST	207	BD<6>	I	Bit stream data input
194	HMODE<0>	I	Mode setting input (L)	208	BD<7>	I	Bit stream data input

8. PANEL FACILITIES

- DVD RECODER [PRV-LX10]
- Front Panel Facilities

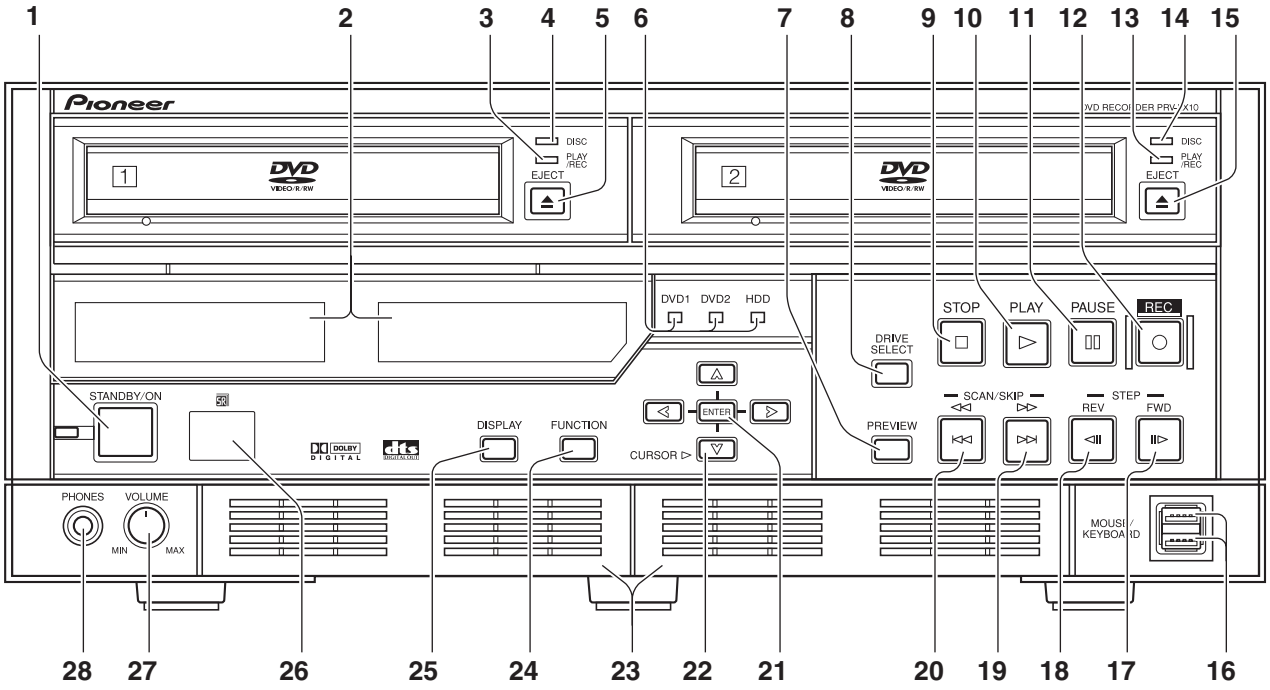

No.	Name	Function
1	**STANDBY/ON button**	When the unit is in the standby condition, pressing this button causes the power to come on; the power indicator (to the left of the button) changes from orange to green. The main display section indicates system startup. After system startup is completed, the unit enters “idling condition,” and as the unit’s display changes to show the current time, the **STOP** button lights. When the unit is in the standby condition, if this button is pressed while holding the **STOP** button depressed, the **Function Menu**’s setting values will be reset to their factory defaults, and the power will then turn ON. If the button is held depressed for one second or more when the unit is in the idling condition, the unit will perform system shutdown, followed by return to the standby mode (the power indicator will change from green to orange). In the event operation becomes unstable and manual forced shutdown is required, hold the button depressed for four seconds or more.
2	**Display sections**	
3	**PLAY/REC indicator for DVD 1 drive**	Lights to indicate operating state of DVD1 drive. Appears green during PLAY mode, and orange during REC mode.
4	**DISC indicator for DVD 1 drive**	Located to the right side of DVD1, this indicator light (orange) to indicate that a disc is loaded. (***1**)
5	**EJECT button (▲) for DVD 1 drive**	Press to open/close DVD1 disc tray. The **DISC** indicator flashes from the time the button is pressed until the disc tray closes fully.
6	**DVD1, DVD2, HDD (Hard disk Drive) indicators**	These indicators light to show which drive has been selected with the **DRIVE SELECT** button (the indicator for the selected drive lights green).
7	**PREVIEW button**	When this button is pressed with the unit in the idling condition, a preview image/sound of the selected input (following encode and decode processing) is supplied to all output connectors except DV; when the button is pressed again, the unit returns to idling condition.
8	**DRIVE SELECT button**	Use to select the playback source and destination drive for recording. The selection changes in the order **HDD** (Hard disk Drive) **→DVD1 →DVD2 →DVD1&2**. When a drive is selected, the corresponding indicator lights (green). When **DVD1&2** is selected, **DVD1** is designated as the playback source.
9	**STOP button (■)**	Functions to stop recording or playback. Until all internal operations are completed, the indicator flashes (white), and when fully completed, the unit returns to the idling condition and the indicator lights (white). Also, during idle condition, pressing the **STOP** button while holding down the **CURSOR** (bottom pointing arrow) button turns progressive encoding ON/OFF. **(*2)** To switch the selected TV system format (NTSC/PAL), hold the **CURSOR** (upward pointing arrow) button depressed and press the **STOP** button.

No.	Name	Function
10	**PLAY button (►)**	When this button is pressed, playback begins from selected source (DVD drive or HDD), and the indicator lights (white). When **HDD** is designated as the recording destination and time shift playback has been set, this button responds even during recording, and initiates playback from the recording start.
11	**PAUSE button (II)**	When pressed, recording or playback is temporarily interrupted and the indicator lights (white). During recording, allows automatic setting of chapters. To resume recording from the recording pause mode, press the **REC** button.
12	**REC button (●)**	When pressed, recording begins to the selected recording destination (drive or project), and the indicator lights (white).
13	**PLAY/REC indicator for DVD 2 drive**	Lights to indicate operating state of DVD2 drive. Appears green during PLAY mode, and orange during REC mode.
14	**DISC indicator for DVD 2 drive**	Located to the right side of DVD2, this indicator light (orange) to indicate that a disc is loaded. (***1**)
15	**EJECT button (▲) for DVD 2 drive**	Press to open/close DVD2 disc tray. The **DISC** indicator flashes from the time the button is pressed until the disc tray closes fully.
16	**MOUSE/KEYBOARD connectors**	Allows connection of a USB mouse, USB keyboard and USB HDD to the unit. **(*3)**
17	**STEP FWD button (II►)**	During normal playback, press for frame advance. Hold depressed for slow motion playback; during slow mode, press again to increase playback speed. **(*5)**
18	**STEP REV button (◄II)**	During normal playback, press for frame playback in reverse direction. Hold depressed for slow motion playback; during slow mode, press to decrease playback speed. **(*5)**
19	**SCAN/SKIP FWD button (►►/ ►►I)**	During playback, press to move to next title or chapter. Hold depressed to initiate scan mode.
20	**SCAN/SKIP REV button (◄◄/I◄◄)**	During playback, press to move to previous title or chapter. Hold depressed to initiate scan mode.
21	**ENTER button**	Press to select function menu items and commands, and to input DVD menu items and commands (during DVD playback). During recording, press to insert chapter marks at optional locations.
22	**CURSOR buttons (▲, ►, ▼, ◄)**	Use when selecting function menu items, and for DVD menu control (during DVD playback).
23	**Filter cover (2)**	These are ventilation ports provided to prevent excessive heating of internal parts. During installation and operation, do not allow these ports to become blocked, since malfunctions may result. * Air filters are installed inside these filter covers, and must be removed and replaced at regular intervals. Continuing to use the unit with clogged filters may result in malfunction. Consult the appended instruction sheet **"Air Filter Replacement Instructions and Precautions"**.
24	**FUNCTION button (*4)**	Press to enable and disable the monitor's on-screen function menu display (default setting: DISABLED). When disabled, the unit returns to idling condition.
25	**DISPLAY button**	Press to turn on-screen display (OSD) ON/OFF (default setting: OFF). This button does not operate when on-screen function display is set to DISABLED.
26	**Remote control sensor**	Receives signals from the remote control unit. Do not allow this part to be blocked by other objects.
27	**VOLUME knob**	Use to adjust output level to the headphones jack.
28	**PHONES jack**	Use to connect headphones.

***1** A disc created on the PRV-LX10 or PRV-LX1 that contains many titles may take dozens of seconds to recognize when loaded. The DISC indicator flashes and the disc recording and playback cannot be started during disc recognition.

***2** Progressive is supported only during NTSC output.
- Connect to progressive-scan TV monitor. Non-progressive monitors will not produce correct playback.
- When progressive is set to ON, no video is output to any output connectors except the component output.

***3** Functionality of connected devices is not guaranteed. If USB mouse and keyboard operation is unstable, try disconnecting and reconnecting the USB connector. If a USB hard disk drive is not recognized, or if operation is unstable, change to a hub supporting USB 2.0. If operation continues to be erratic, inquire your Pioneer dealer or one of the service centers listed at the end of this manual.

***4** This operates the same as the remote control unit's **SETUP** button. The **FUNCTION** button operates only in the idling condition.

***5** When performing reverse slow-motion playback with progressive output (NTSC only), the speed cannot be changed.

• Rear Panel Facilities

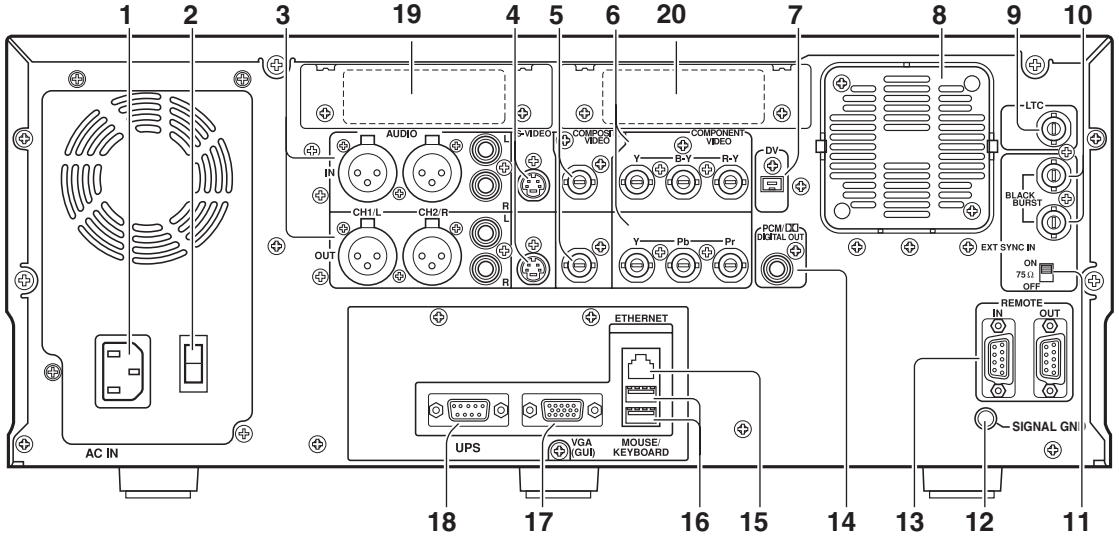

No.	Name	Function
1	**AC IN connector**	Connect to power cord.
2	**Main power switch**	When set to ON, the unit enters standby condition and front panel indicator lights orange.
3	**AUDIO CH1/L CH2/R IN/OUT connectors**	Input/output connectors for analog audio CH1/L CH2/R signals.
4	**S-VIDEO IN/OUT connectors**	Input/output connectors for S-VIDEO video signal. Output is compatible with S2.
5	**COMPOSITE VIDEO IN/OUT connectors**	Input/output connectors for analog composite video signals. Note: Use coaxial cables (impedance: 75-ohm) to connect with BNC plugs.
6	**COMPONENT VIDEO IN/OUT connectors**	Input/output connectors for analog component video signals. **(*1)** Note: Use coaxial cables (impedance: 75-ohm) to connect with BNC plugs.
7	**DV connector (*6)**	Connect to DV connector of professional use VTR or similar component.
8	**Fan motor**	Fan motor for cooling internal parts.
9	**LTC connector (*2)**	Connector for obtaining time code from VHS, VTR, etc. Note: Use a coaxial cable (impedance: 75-ohm) to connect with BNC plugs.
10	**EXT SYNC IN and through Output connector**	Use for connecting external sync signal, and for pass-through signals. Note: Use coaxial cables (impedance: 75-ohm) to connect with BNC plugs.
11	**Terminate switch**	Use to terminate sync signal. Set to ON when used alone or when connected to a terminating unit.
12	**SIGNAL GND terminal**	Ground terminal for signals. When using the unit in environments exposed to high levels of electronic noise, malfunctions may occur to mouse and other control devices. In such cases, connect a ground wire between the components to reduce the noise. This is not an electric safety ground.
13	**REMOTE IN/OUT connectors**	RS-422A compatible external control connector. The protocol is compatible with SONY format. **(*3)**
14	**PCM/DIGITAL OUT connector**	Digital audio output connector. Note: Use a coaxial cable (impedance: 75-ohm) to connect with RCA in plugs.
15	**ETHERNET connector**	Use for network connection.
16	**MOUSE/KEYBOARD connectors**	Allows connection of a USB mouse, USB keyboard and USB HDD to the unit. **(*4)**
17	**VGA (GUI) connector**	Connect to VGA monitor for expanded operation. **(*5)**
18	**UPS connector**	Connect when using UPS.
19	**Expansion slot 1**	Provided to allow installation of the optional SDI AES/EBU input board (PRA-BD11). • Consult your dealer regarding installation.
20	**Expansion slot 2**	Provided to allow installation of the optional SDI AES/EBU output board (PRA-BD12). • Consult your dealer regarding installation.

***1** Inputs are compatible with signal levels for both BETA and SMPTE (NTSC only). However, since outputs are based on DVD format, they differ from BETA and SMPTE levels. As a result, outputs should be used only for monitoring.

***2** LTC is not supported in drop frame mode.

***3** SONY is a trademark of Sony Corporation. Frame precision is not guaranteed when this unit is used as a playback unit for editing. This component does not support control from an editing machine.

***4** Functionality of connected devices is not guaranteed. If a USB hard disk drive is not recognized, or if operation is unstable, change to a hub supporting USB 2.0. If USB mouse and keyboard operation is unstable, try disconnecting and reconnecting the USB connector. If operation continues to be erratic, inquire your Pioneer dealer or one of the service centers listed at the end of this manual.

***5** The VGA output connector is provided for future expansion use; at present, the connector does not support the output of GUI display signals Whenever connecting a DV cable to the rear panel DV connector, be sure to attach the accessory ferrite core to the cable.

• Remote control unit

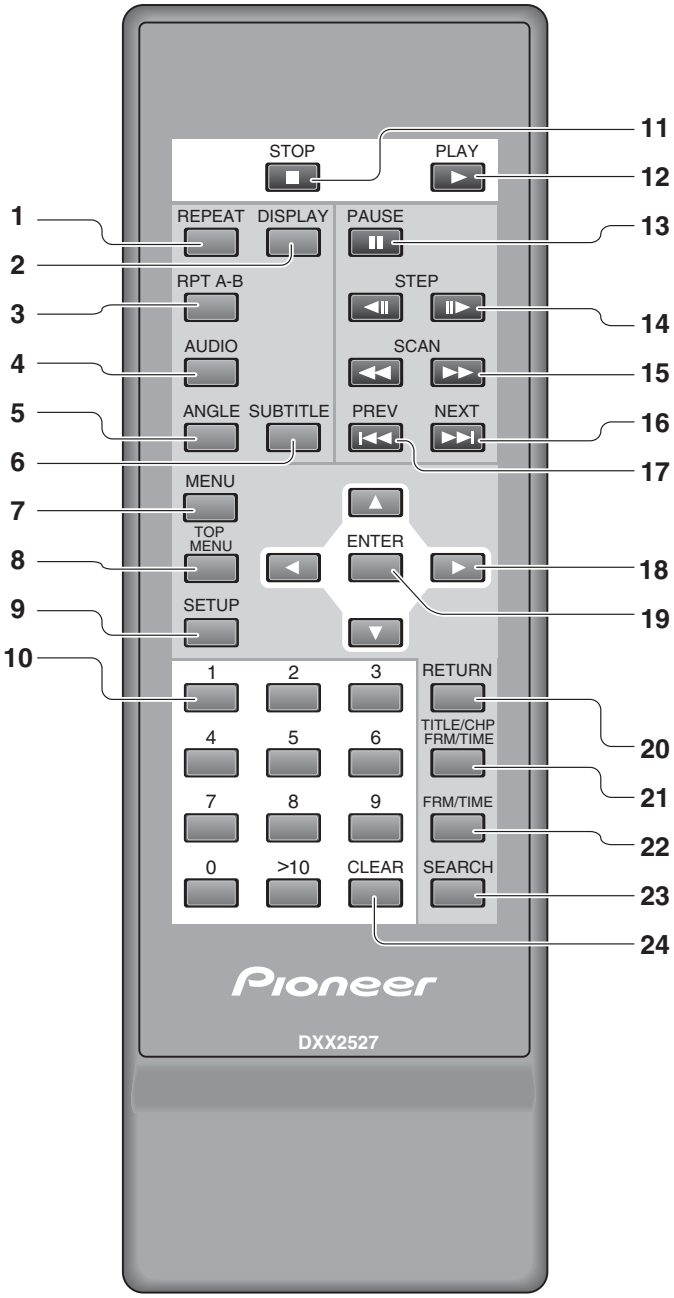

No.	Name
1	**REPEAT** button
2	**DISPLAY** button
3	**RPT A-B** button (repeat playback between two points)
4	**AUDIO** select button
5	**ANGLE** button
6	**SUBTITLE** button
7	**MENU** button
8	**TOP MENU** button
9	**SETUP** menu button ***1**
10	Number buttons (**0–9**, **>10**)
11	**STOP** button (■)
12	**PLAY** button (►)
13	**PAUSE** button (II)
14	**STEP** / Slow buttons (◄II, II►)
15	**SCAN** (fast forward/reverse) buttons (◄◄, ►►)
16	Chapter skip **NEXT** button (►►I)
17	Chapter skip **PREV** button (I◄◄)
18	Cursor buttons (▲, ►, ▼, ◄)
19	**ENTER** button
20	**RETURN** button
21	Title, chapter, frame, time button (**TITLE**/**CHP**/**FRM**/**TIME**)
22	Frame/time button (**FRM**/**TIME**)
23	**SEARCH** button
24	**CLEAR** button

***1** This key operates the same as the FUNCTION button on the main unit.

■ Jigs list

JIG No.	JIG Name	Remarks
GGF1067	Service Remote control unit	Test mode operated
GGF1348	DVD Interface jig	Rewriting of GUID
GGV1139	DVD-R	
GGV1050	DVD-RW	
GGV1176	HDD Copy Disc for PRV-LX1	HDD Replacement
GGV1177	OS Install Disc for PRV-LX1	
GGV1234	Program Install Disc for PRV-LX1(Ver.3.01)	
	Frequency counter	Clock adjustment
DEX1008	Forced ejection pin	Open the tray for Drive1 and Drive2
GEM1004	Cleaning liquid	Pickup lenses
GED-008	Cleaning paper	Pickup lenses and Fans